# TOOLING MANUAL

—FOR

Mazak Quick Turn 10N

**CHUCKER & UNIVERSAL**

SERIAL NUMBER : 66079

## CONTENTS

## 1. INTRODUCTION TO QUICK TURN 10 TOOLING

3 kinds of turrets are available on the "Quick Turn 10N"; square turret (option), octagonal turret and dodecagonal turret (option). As for the square turret, four fixed type tool holders suitable for mounting a drill and a reamer and four movable type tool holder can be mounted, thus permitting up to eight tools to be mounted.

Since one face of the turret can hold up to three tools, a workpiece with simple contour can be cut without turret indexing. The feature assures much shorter machining time for higher efficiency.

With mounting the movable type tool holder at a proper position, simultaneous cuts of ID and OD can be performed.

As a tool to be used on the turret, use of a qualified tool (20 mm x 20 mm shank) which provides accurate tool tip point setting by simply mounting on the turret is advisable.

If an optional spare turret is chosen, the turret can be changed with tool holders on it; loss of productivity due to tool presetting on the turret can be eliminated.

As for the octagonal drum turret, the direct mount system is employed and eight O.D. cutting tools for forward and reverse can be mounted.

And also up to eight pieces of the tool holder (Boring bar holder, Facing holder and U drill holder) used in common for forward and reverse can be mounted on the outer surface of turret and eight tools can be mounted freely combinning with the tool through the direct mount system.

Furthermore since the short way swivelling system is employed for the turret, programming can be carried out regardless of the tool selecting time and the cycle time is shortened.

The dodecangular drum turret can be mounted with 12 tools in total: 6 tools are for machining the outer diameter and sides by rotating forward or reverse; the other six for the inner diameter. The turret for the tools machining the outer diameter and sides adopts a direct mounting system as used for the octangular drum turret. For machining the inner diameter, the tools also can be mounted directly to the turret without using a boring bar holder. This turret, being provided with many tools, is well suited for permanent setting which is mainly intended for chuck work. The short-cut turning of the turret is the same as that of the octangular drum turret.

## 1-1 How to mount tool holders

### 1-1-1 Square turret

(1) Fixed type tool holder

A fixed type tool holder is located in position with a dowel pin and clamped securely by clamp screws from the rear. Since the tool holding hole in it is self-bored on the machine to assure precise alignment to the spindle center, never try to remove the fixed type tool holder from the turret.

(2) Movable type tool holder

A movable type tool holder is fixed on the turret by means of a T-nut and it can be readily re-positioned on the turret as desired by loosening the T-nut. If its position is determined by turning the M10 set screw with an Allen wrench, it can be mounted on the turret accurately even after removing it once.

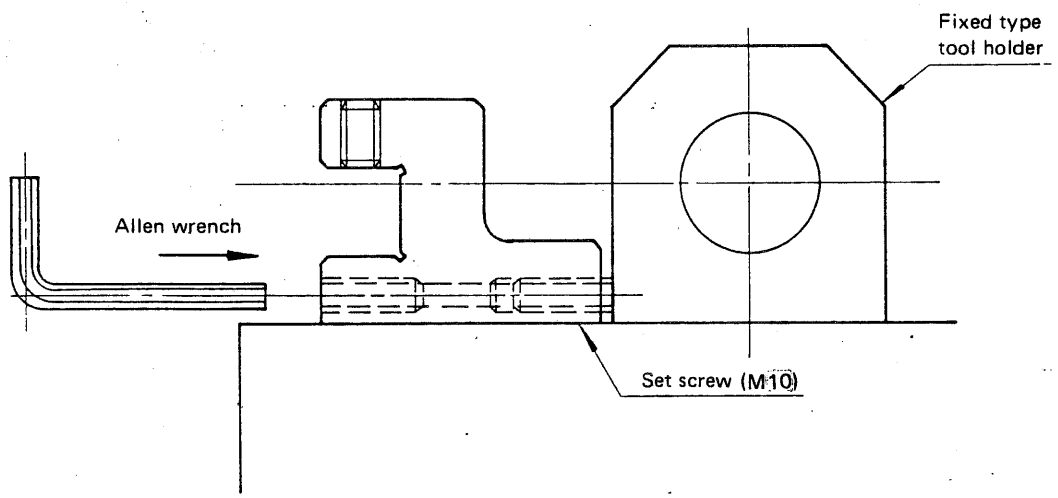


### 1-1-2 Octagonal drum turret

The tool holder is positioned toward Z axis with the pin, being fixed with the bolt on the turret.

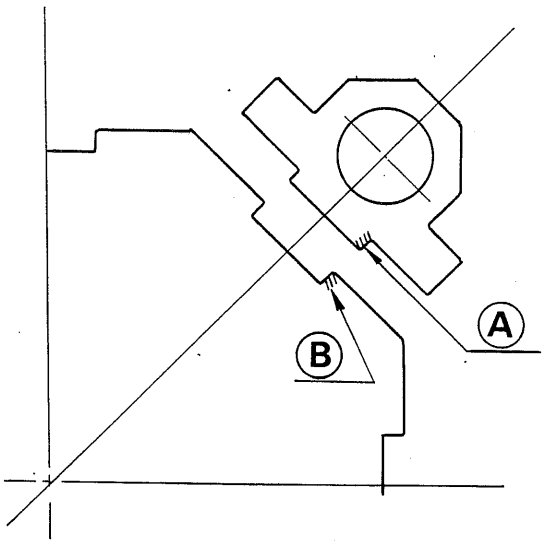


When attaching the tool holder, push the boss side (A) of holder to the groove side (B) of turret for tightening the bolt.

## 1-2 How to preset tool holder

### 1-2-1 Square turret

The tool tip points must be located within ϕ436 circle having the center at the center of the turret so that the turret can be indexed without interference with the machine.

(For Universal type, great care should be exercised on the interference between the tool and the tailstock.)

When the tools are all set at the standard position, minimum diameter to be cut is 24 mm even if tool B is located near as 5 mm to the tailstock body as in Fig. 1 since projection of tool A is 175 mm from the turret center while side face of the shank (tool B) is 130 mm from the turret center.

With moving the tool in +Z direction as shown in Fig. 2, set projection amount of the tool to 188 mm from the turret center. This enables 0 mm diameter to be cut with leaving the clearance 6 mm between the tailstock body and tool B. If tool B is moved in +X direction, such a clearance is further enlarged to assure safety in operation. Minimum dimension of the clearance is 5 mm.

CAUTION: With the tools set as in Fig. 2, the turret will be collided with the chuck if the tool is moved near the chuck.

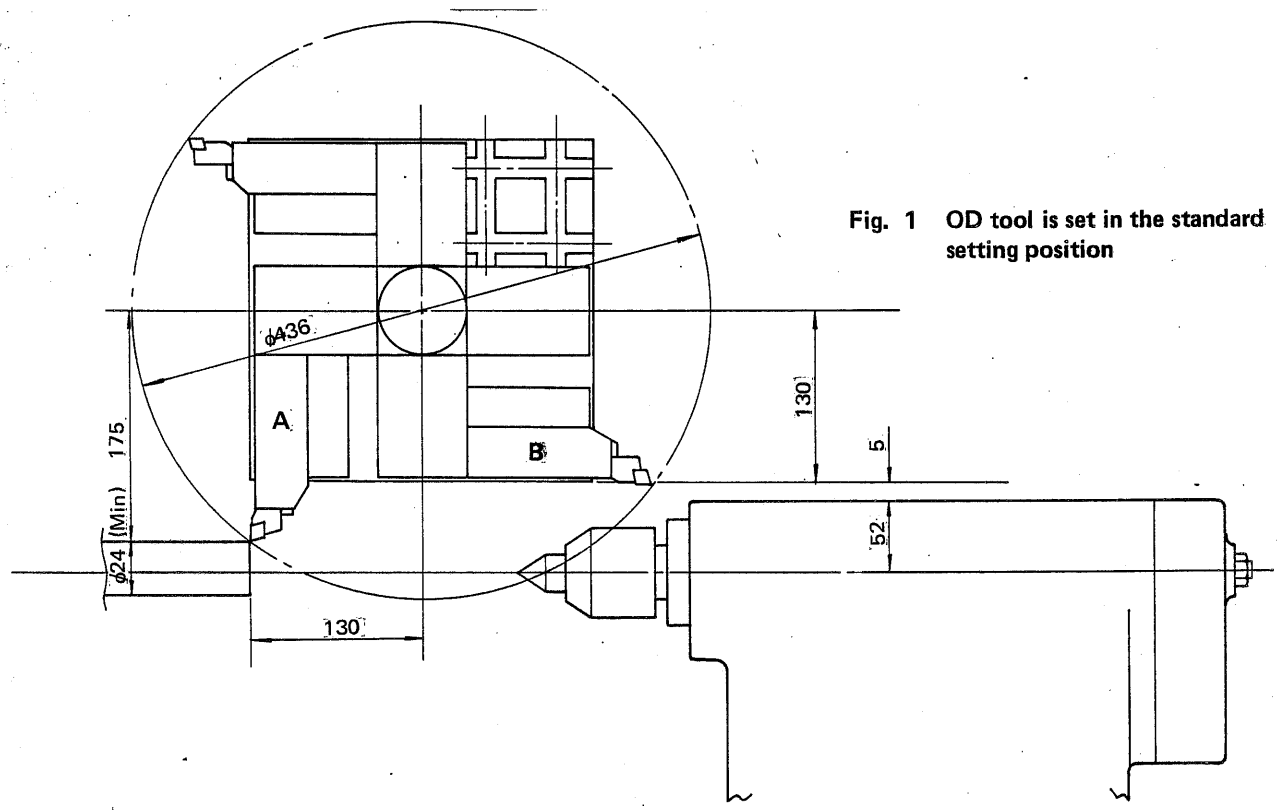


**Fig. 1 OD tool is set in the standard setting position**

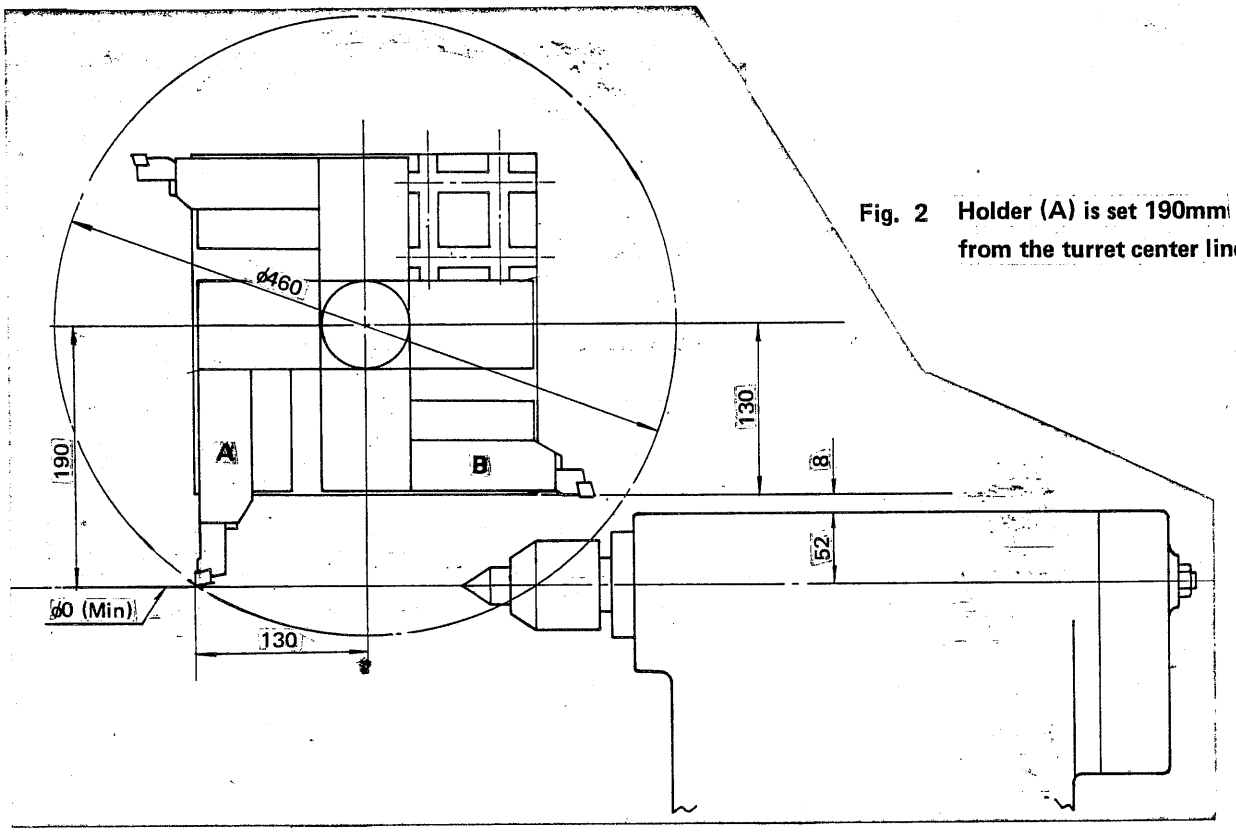


Fig. 2 Holder (A) is set 190mm from the turret center line.

### 1-2-2 Octagonal drum turret

When the tools are all set at the standard position, minimum diameter to be cut is 10 mm even if the clearance between the tailstock body and the turret base is 5 mm since projection of tool A is 175 mm from the turret center.

By attaching the option ring for zero dia. cutting, set the projection amount of the tool to 185 mm from the turret center. This enables 0 mm diameter to be cut with leaving the clearance 5 mm between the tailstock body and the turret base. Minimum dimension of the clearance is 5 mm.

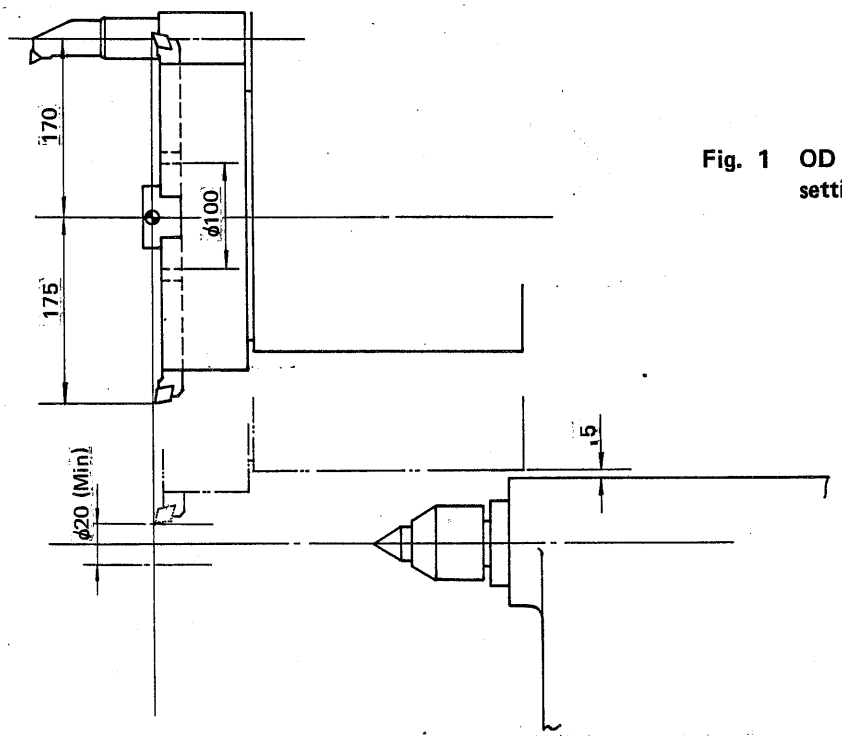


**Fig. 1 OD tool is set in the standard setting position**

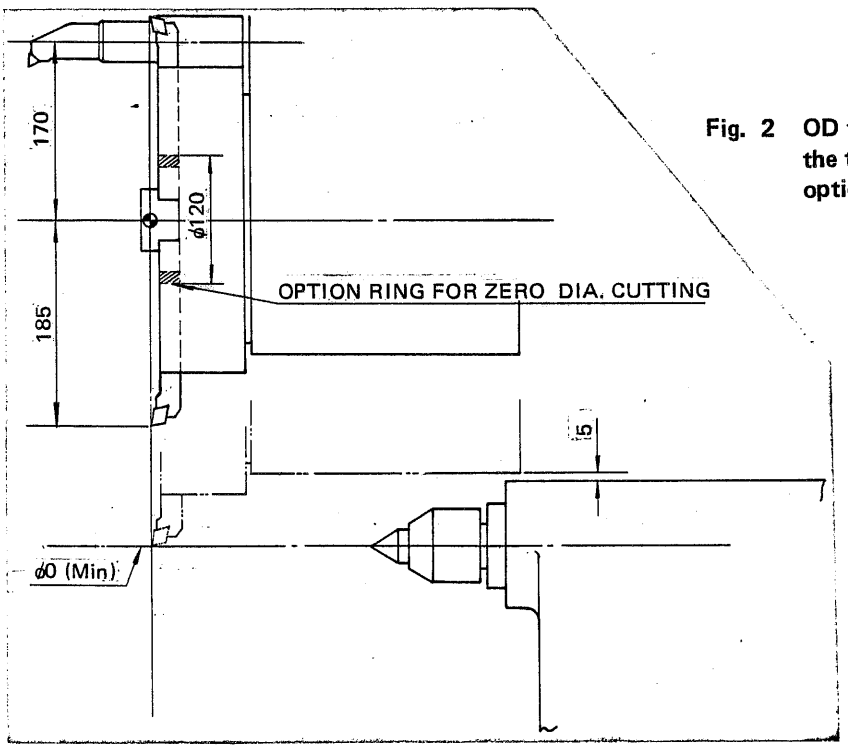


**Fig. 2 OD tool is set 185 mm from the turret center by use of the option ring**

# 2 TOOLING SYSTEM

## 2-1 Octagonal drum turret

### 2-1-1 Metric system

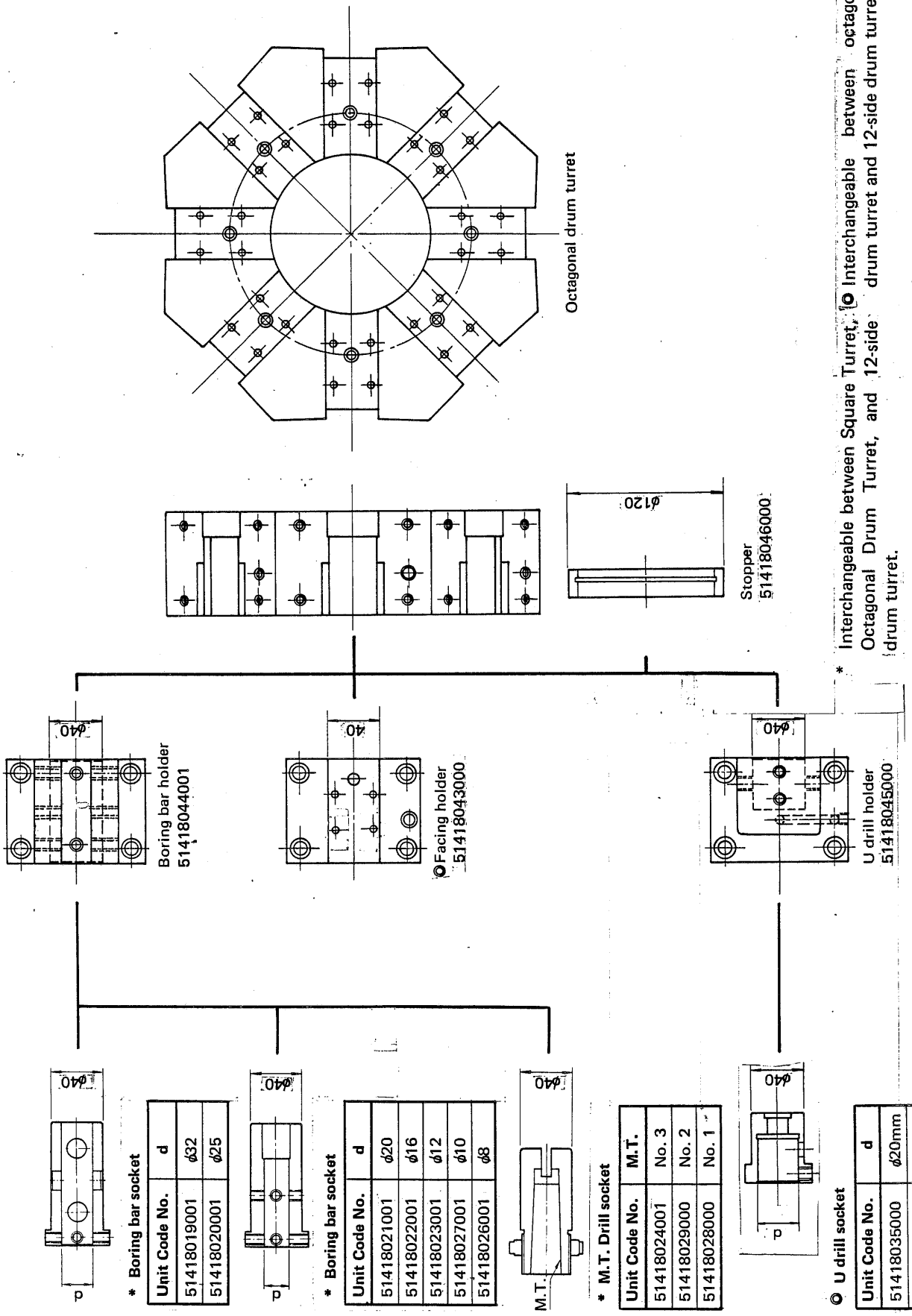


* Interchangeable between Square Turret, Octagonal Drum Turret, and 12-side drum turret.

◎ Interchangeable between octagonal drum turret and 12-side drum turret.

* Boring bar socket

| Unit Code No. | d |
|---|---|
| 51418019001 | ϕ32 |
| 51418020001 | ϕ25 |

* Boring bar socket

| Unit Code No. | d |
|---|---|
| 51418021001 | ϕ20 |
| 51418022001 | ϕ16 |
| 51418023001 | ϕ12 |
| 51418027001 | ϕ10 |
| 51418026001 | ϕ8 |

* M.T. Drill socket

| Unit Code No. | M.T. |
|---|---|
| 51418024001 | No. 3 |
| 51418029000 | No. 2 |
| 51418028000 | No. 1 |

◎ U drill socket

| Unit Code No. | d |
|---|---|
| 51418035000 | ϕ20mm |
| 51418036000 | ϕ25mm |
| 51418037000 | ϕ32mm |

## 2-1-2 Inch system

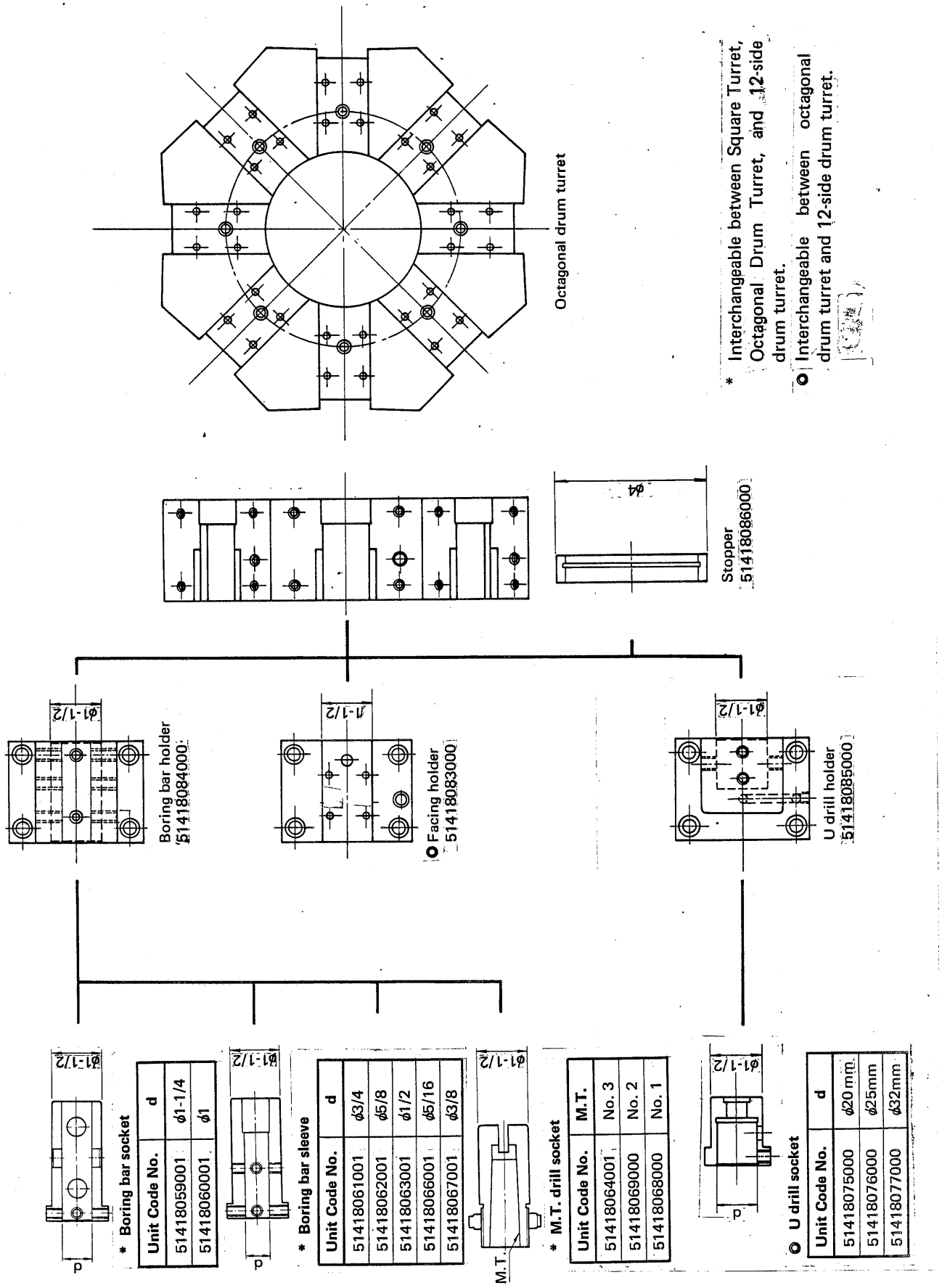


* Interchangeable between Square Turret, Octagonal Drum Turret, and 12-side drum turret.

○ Interchangeable between octagonal drum turret and 12-side drum turret.

| Unit Code No. | d |
|---|---|
| 51418059001 | ϕ1-1/4 |
| 51418060001 | ϕ1 |

| Unit Code No. | d |
|---|---|
| 51418061001 | ϕ3/4 |
| 51418062001 | ϕ5/8 |
| 51418063001 | ϕ1/2 |
| 51418066001 | ϕ5/16 |
| 51418067001 | ϕ3/8 |

| Unit Code No. | M.T. |
|---|---|
| 51418064001 | No. 3 |
| 51418069000 | No. 2 |
| 51418068000 | No. 1 |

| Unit Code No. | d |
|---|---|
| 51418075000 | ϕ20mm |
| 51418076000 | ϕ25mm |
| 51418077000 | ϕ32mm |

## 2-2 12-side drum turret

### 2-2-1 Metric system

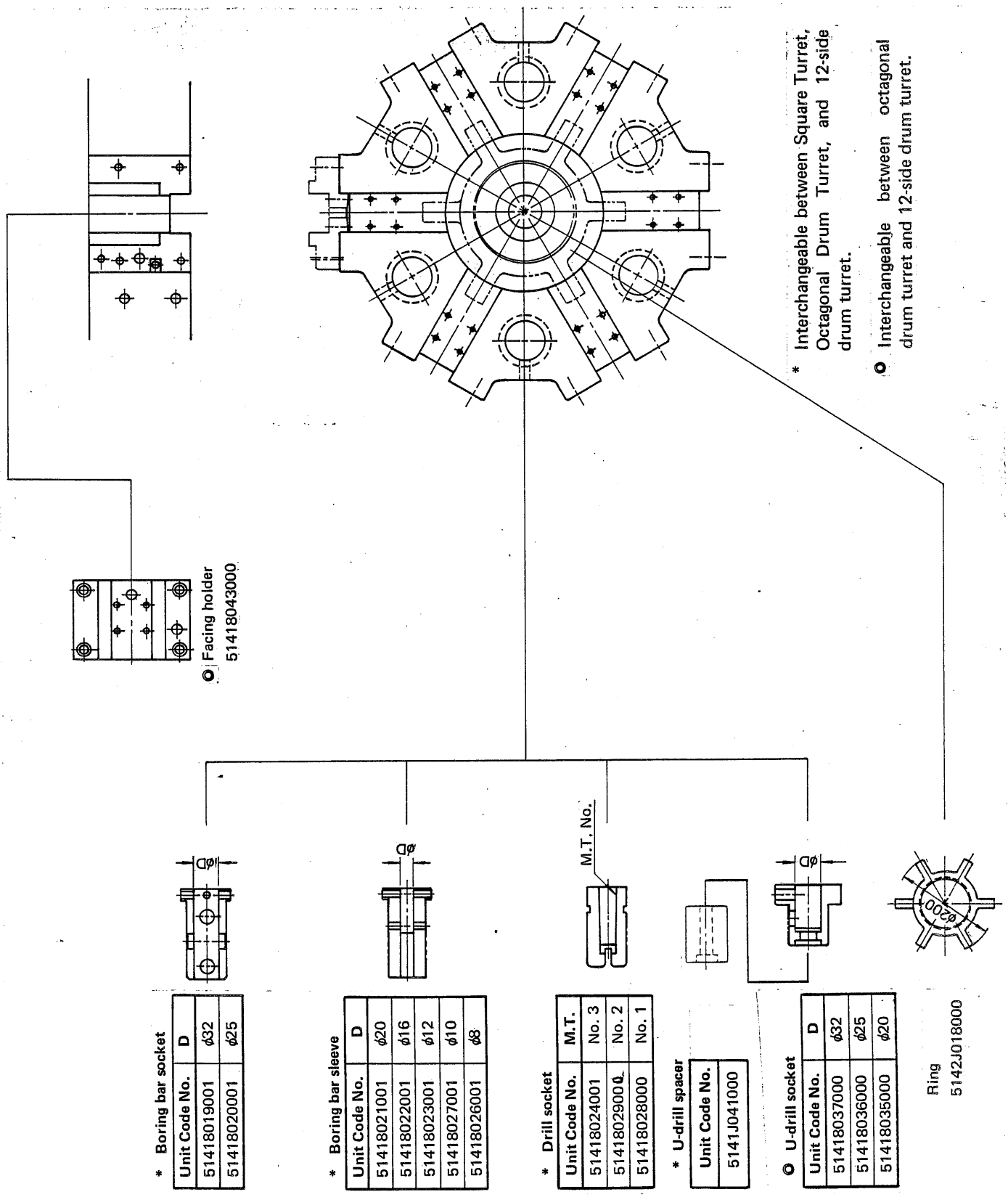


* Boring bar socket

| Unit Code No. | D |
|---|---|
| 51418019001 | φ32 |
| 51418020001 | φ25 |

* Boring bar sleeve

| Unit Code No. | D |
|---|---|
| 51418021001 | φ20 |
| 51418022001 | φ16 |
| 51418023001 | φ12 |
| 51418027001 | φ10 |
| 51418026001 | φ8 |

* Drill socket

| Unit Code No. | M.T. |
|---|---|
| 51418024001 | No. 3 |
| 51418029001 | No. 2 |
| 51418028000 | No. 1 |

* U-drill spacer

| Unit Code No. |
|---|
| 5141J041000 |

○ U-drill socket

| Unit Code No. | D |
|---|---|
| 51418037000 | φ32 |
| 51418036000 | φ25 |
| 51418035000 | φ20 |

## 2-2-2 Inch system

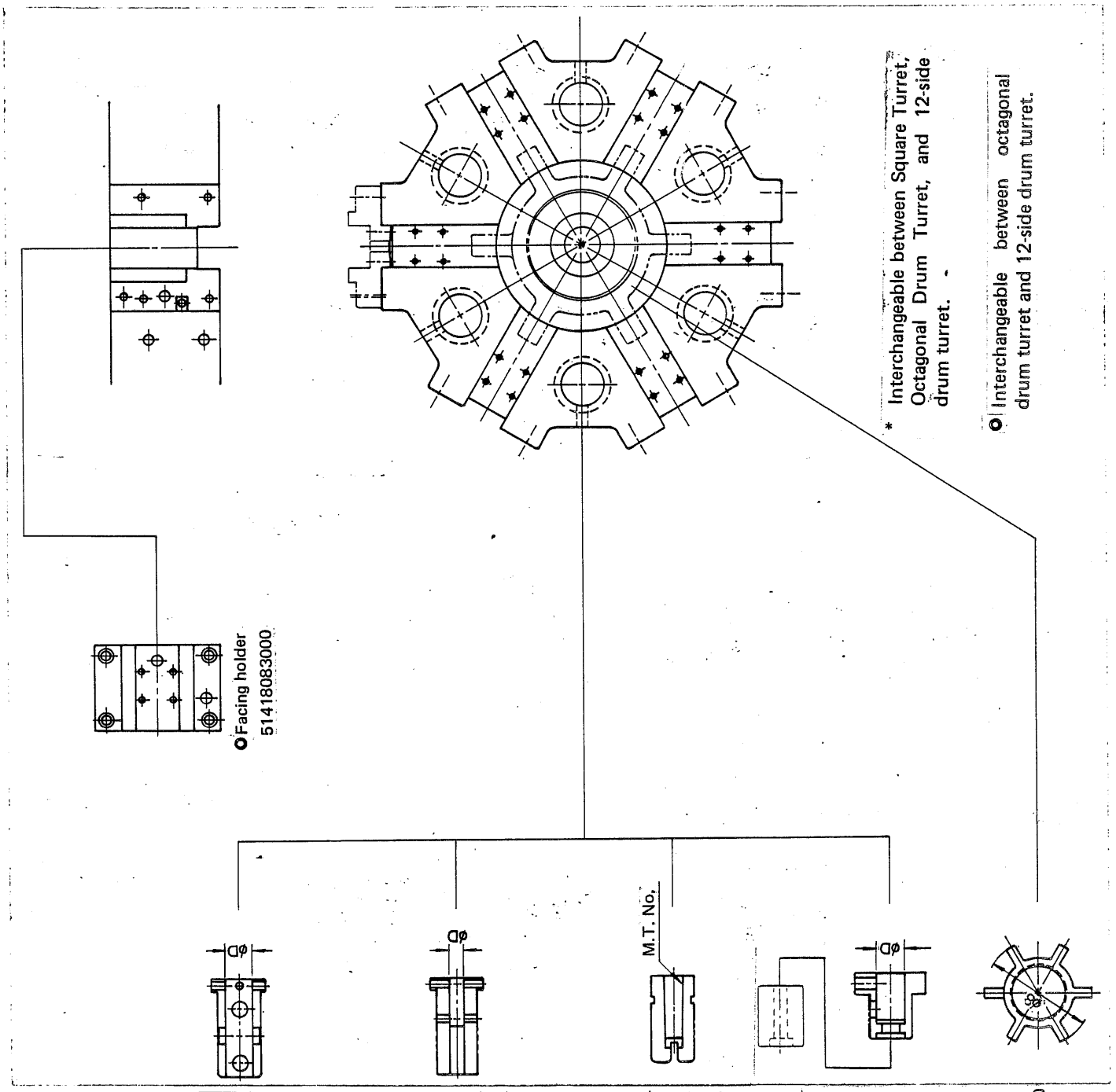


* Boring bar socket

| Unit Code No. | D |
|---|---|
| 51418059001 | ϕ1-1/4 |
| 51418060001 | ϕ1 |

* Boring bar sleeve

| Unit Code No. | D |
|---|---|
| 51418061001 | ϕ3/4 |
| 51418062001 | ϕ5/8 |
| 51418063001 | ϕ1/2 |
| 51418066001 | ϕ5/16 |
| 51418067001 | ϕ3/8 |

* Drill socket

| Unit Code No. | M.T. |
|---|---|
| 51418064001 | No. 3 |
| 51418069000 | No. 2 |
| 51418068000 | No. 1 |

* U-drill spacer

| Unit Code No. |
|---|
| 5141J04100 |

O U-drill socket

| Unit Code No. | D |
|---|---|
| 51418077000 | ϕ32 |
| 51418076000 | ϕ25 |
| 51418075000 | ϕ20 |

## 2–3 Square turret

### 2–3–1 Metric system

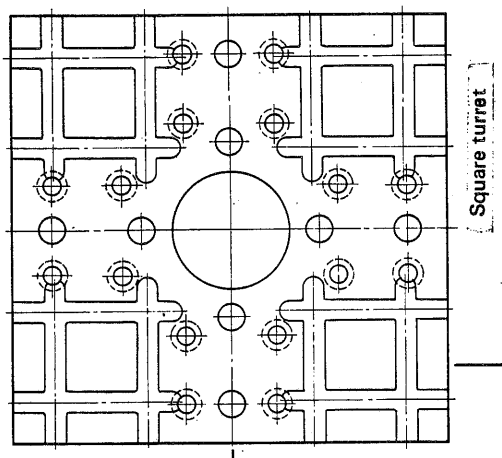


* Interchangeable between Square Turret, Octagonal Drum Turret, and 12-side drum turret.

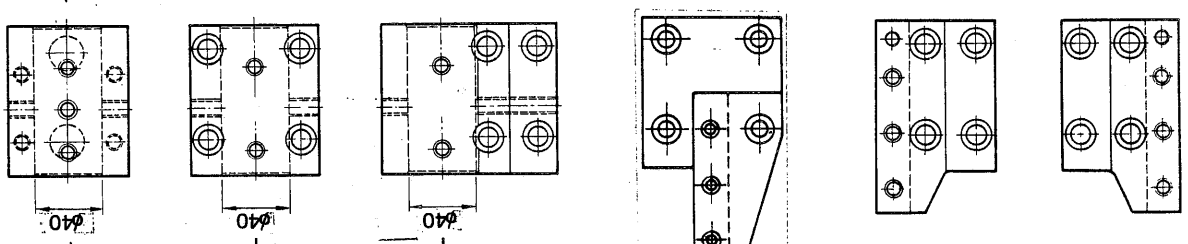


Boring bar holder 51418013000

Flange holder 51418014000

Flange holder 51418015000

Turning holder 51418016000

Turning holder 51418017000 51418025000

Facing holder 51418030000 51418034000

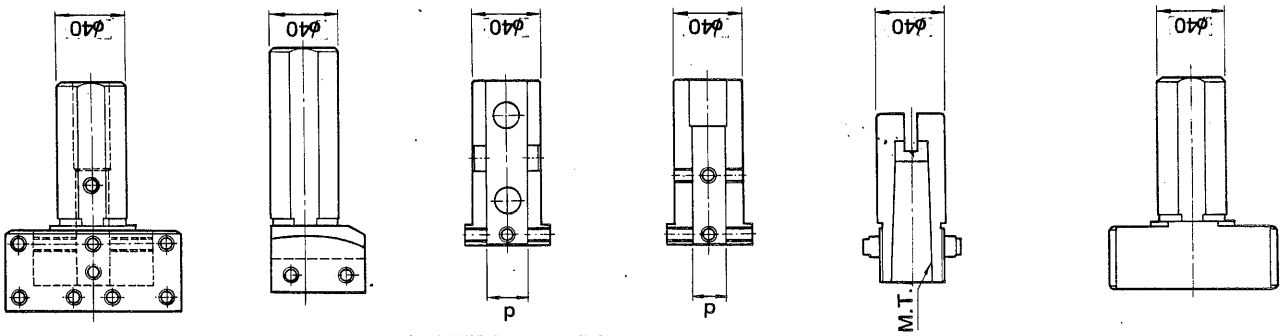


Multiple tool holder 51411J020000

Turning holder 51418018000

* Boring bar socket

| Unit Code No. | d |
|---|---|
| 51418019001 | ϕ32 |
| 51418020001 | ϕ25 |

* Boring bar sleeve

| Unit Code No. | d |
|---|---|
| 51418021001 | ϕ20 |
| 51418022001 | ϕ16 |
| 51418023001 | ϕ12 |
| 51418027001 | ϕ10 |
| 51418026001 | ϕ8 |

* Drill socket

| Unit Code No. | M.T. |
|---|---|
| 51418024001 | No. 3 |
| 51418029000 | No. 2 |
| 51418028000 | No. 1 |

Drill holder blank 51411J022000

## 2–3–2 Inch system

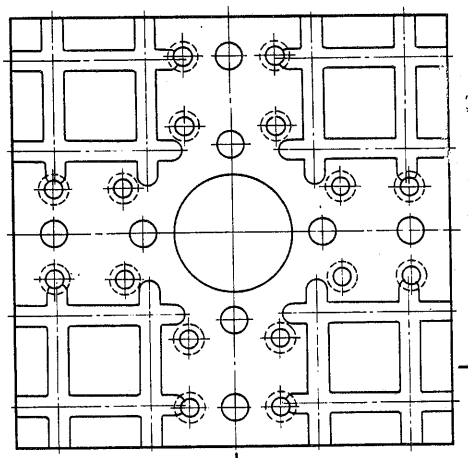


* Interchangeable between Square Turret, Octagonal Drum Turret, and 12-side drum turret.

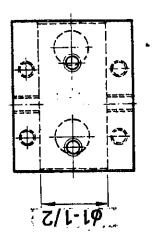


Boring bar holder
51418053000

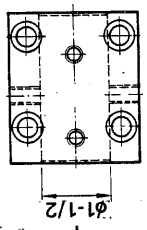


Flange holder
51418054000

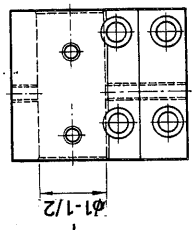


Flange holder
51418055000

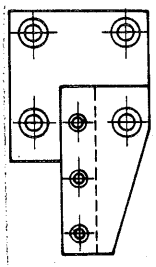

Turning holder
51418056000

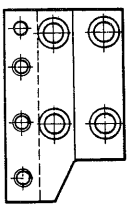

Turning holder
51418057000
51418065000

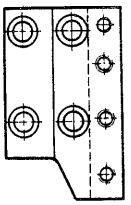

Facing holder
51418070000
51418074000

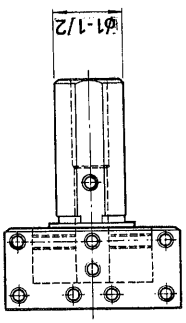


Multiple tool holder
51411021000


Turning holder
51418058000

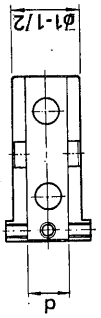


* Boring bar socket

| Unit Code No. | d |
|---|---|
| 51418059001 | ϕ1-1/4 |
| 51418060001 | ϕ1 |

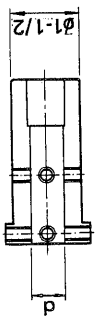


* Boring bar sleeve

| Unit Code No. | d |
|---|---|
| 51418061001 | ϕ3/4 |
| 51418062001 | ϕ5/8 |
| 51418063001 | ϕ1/2 |
| 51418067001 | ϕ3/8 |
| 51418066001 | ϕ5/16 |

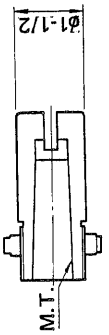


* Drill socket

| Unit Code No. | M.T. |
|---|---|
| 51418064001 | No. 3 |
| 51418069000 | No. 2 |
| 51418068000 | No. 1 |

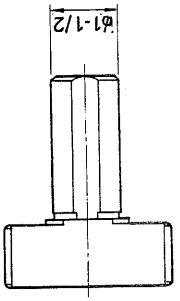


Drill holder blank
5141J023000

# 3. TOOL HOLDER

## 3-1 Square turret

### 3-1-1 Boring bar holder

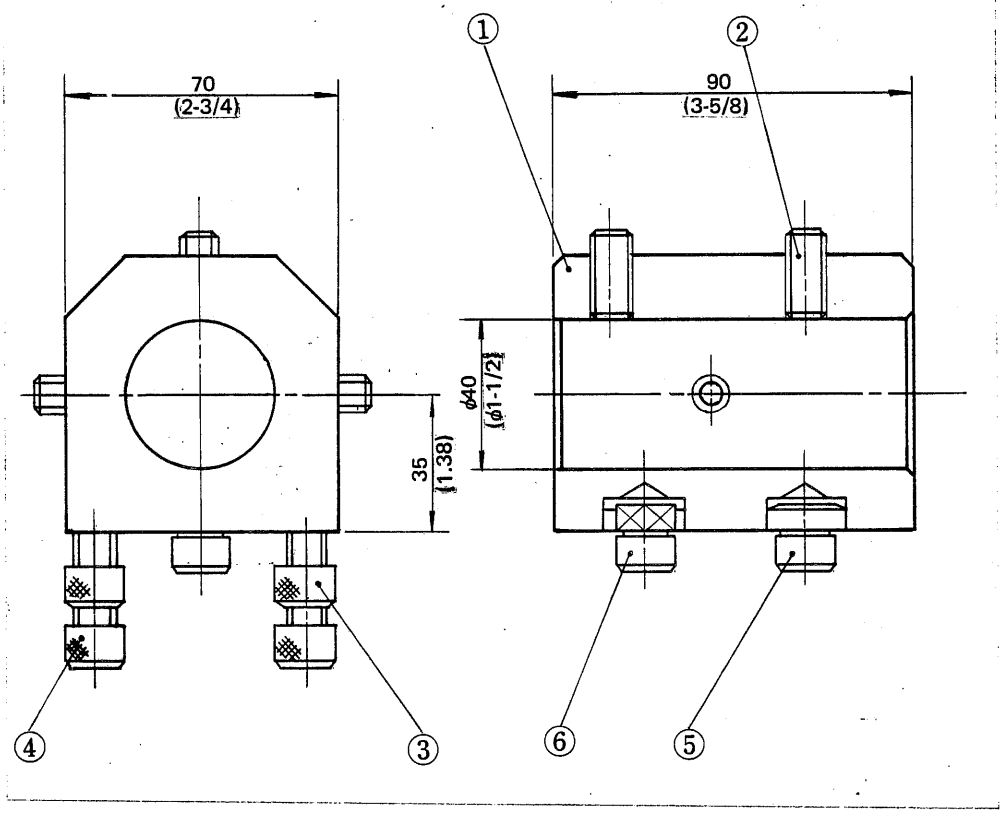


| Unit Code No. | No. | Parts Code No. | Designation | Q'ty | Remarks |
|---|---|---|---|---|---|
| 51418013000 Boring bar holder (Metric system) | 1 | 31418011011 | Boring bar holder | 1 | |
| | 2 | A15B10X0140 | Hex. socket set screw | 4 | M10 x 14 (Flat point) |
| | 3 | A06CB100350 | Hex. socket head cap screw | 2 | M10 x 35 |
| | 4 | A06CB100550 | Hex. socket head cap screw | 2 | M10 x 55 |
| | 5 | 41418011151 | Locating pin | 1 | |
| | 6 | 41418011161 | Locating pin | 1 | |
| 51418053000 Boring bar holder (Inch system) | 1 | 31418011811 | Boring bar holder | 1 | |
| | 2 | A15B10X0140 | Hex. socket set screw | 4 | M10 x 14 (Flat point) |
| | 3 | A06CB100350 | Hex. socket head cap screw | 2 | M10 x 35 |
| | 4 | A06CB100550 | Hex. socket head cap screw | 2 | M10 x 55 |
| | 5 | 41418011150 | Locating pin | 1 | |
| | 6 | 41418011160 | Locating pin | 1 | |

## 3-1-2 Flange holder (1)

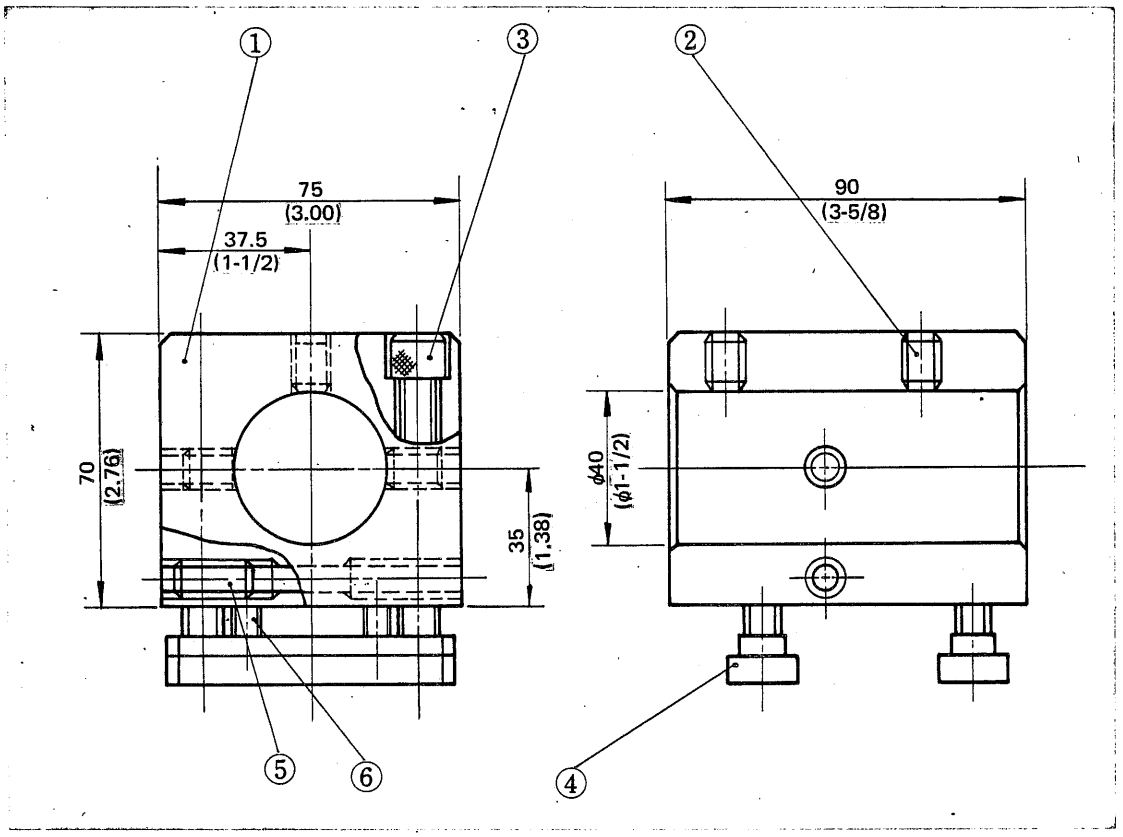


| Unit Code No. | No. | Parts Code No. | Designation | Q'ty | Remarks |
|---|---|---|---|---|---|
| 51418014000 Flange holder (Metric system) | 1 | 31418011022 | Flange holder | 1 | |
| | 2 | A15B10X0140 | Hex. socket set screw | 4 | M10 x 14 (Flat point) |
| | 3 | A06CB100750 | Hex. socket head cap screw | 4 | M10 x 75 |
| | 4 | 41418011130 | T nut | 2 | |
| | 5 | A15B10X0250 | Hex. socket set screw | 1 | M10 x 25 (Flat point) |
| | 6 | A12006X0250 | Spring pin | 4 | ϕ6 x 25 |
| 51418054000 Flange holder (Inch system) | 1 | 31418011821 | Flange holder | 1 | |
| | 2 | A15B10X0140 | Hex. socket set screw | 4 | M10 x 14 (Flat point) |
| | 3 | A06CB100750 | Hex. socket head cap screw | 4 | M10 x 75 |
| | 4 | 41418011130 | T nut | 2 | |
| | 5 | A15B10X0250 | Hex. socket set screw | 1 | M10 x 25 (Flat point) |
| | 6 | A12006X0250 | Spring pin | 4 | ϕ6 x 25 |

## 3-1-3 Flange holder (2)

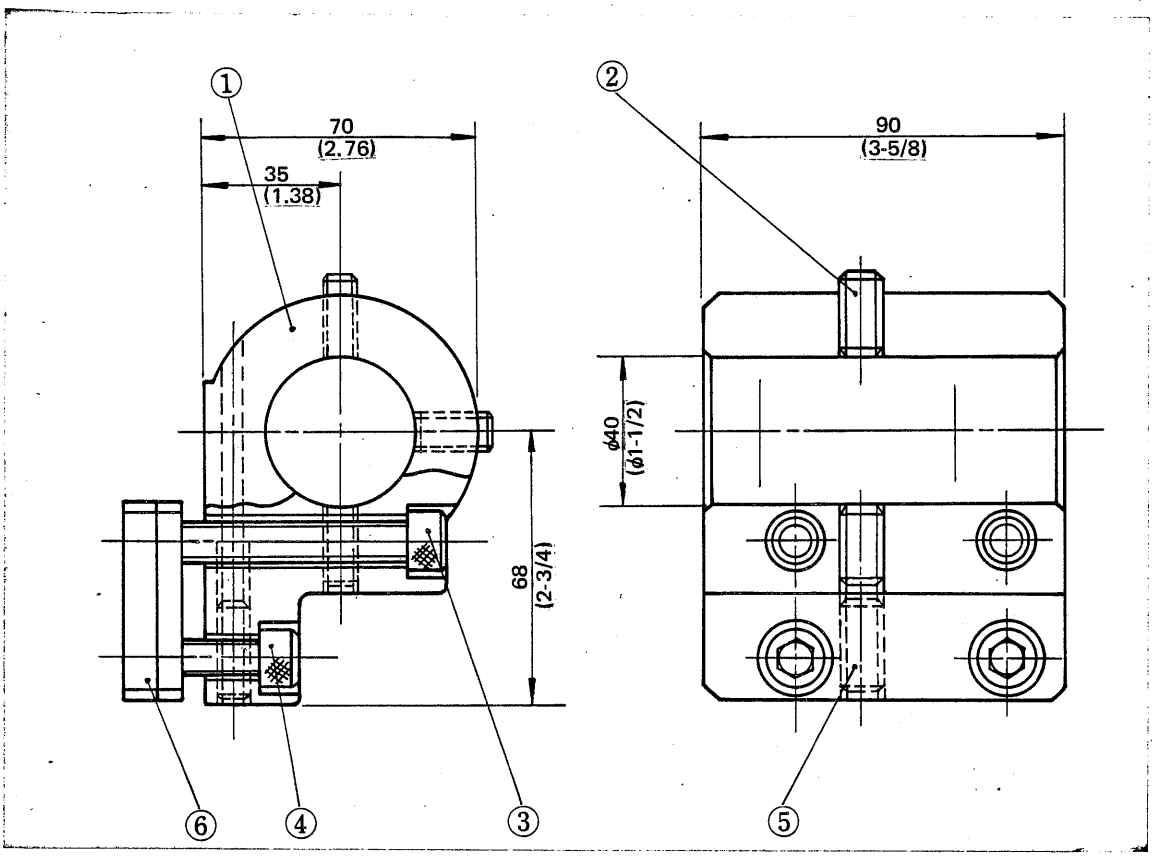


| Unit Code No. | No. | Parts Code No. | Designation | Q'ty | Remarks |
|---|---|---|---|---|---|
| 51418015000 Flange holder (Metric system) | 1 | 31418011031 | Flange holder | 1 | |
| | 2 | A15B10X0200 | Hex. socket set screw | 4 | M10 x 20 (Flat point) |
| | 3 | A06CB100700 | Hex. socket head cap screw | 2 | M10 x 70 |
| | 4 | A06CB100300 | Hex. socket head cap screw | 2 | M10 x 30 |
| | 5 | A15B10X0250 | Hex. socket set screw | 1 | M10 x 25 (Flat point) |
| | 6 | 41418011140 | T nut | 2 | |
| 51418055000 Flange holder (Inch system) | 1 | 31418011831 | Flange holder | 1 | |
| | 2 | A15B10X0200 | Hex. socket set screw | 4 | M10 x 20 (Flat point) |
| | 3 | A06CB100700 | Hex. socket head cap screw | 2 | M10 x 70 |
| | 4 | A06CB100300 | Hex. socket head cap screw | 2 | M10 x 30 |
| | 5 | A15B10X0250 | Hex. socket set screw | 1 | M10 x 25 (Flat point) |
| | 6 | 41418011140 | T nut | 2 | |

## 3-1-4 Turning holder (1)

### a) Metric system

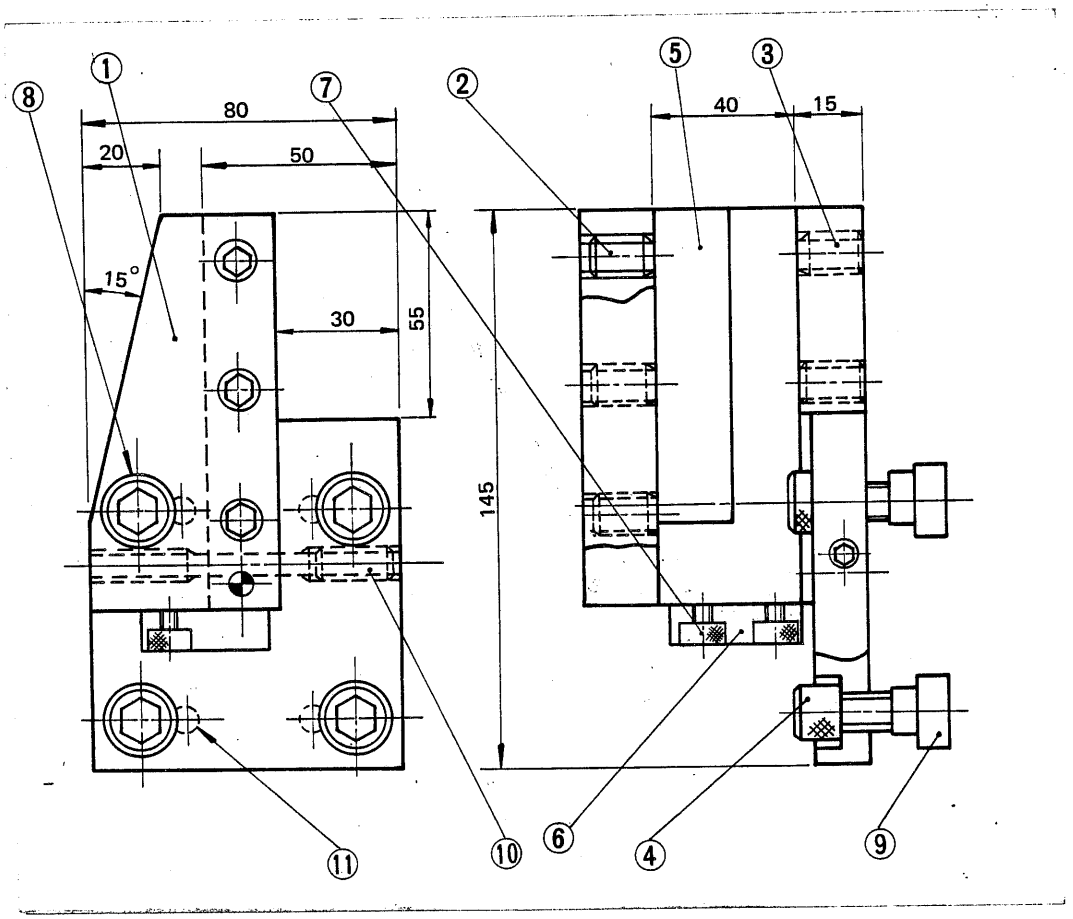


| Unit Code No. | No. | Parts Code No. | Designation | Q'ty | Remarks |
|---|---|---|---|---|---|
| 51418016000<br>Turning holder<br>(Metric system) | 1 | 31418011041 | Turning holder | 1 | |
| | 2 | A15B10X0200 | Hex. socket set screw | 3 | M10 x 20 (Flat point) |
| | 3 | A15B10X0160 | Hex. socket set screw | 3 | M10 x 16 (Flat point) |
| | 4 | A06CB100250 | Hex. socket head cap screw | 3 | M10 x 25 |
| | 5 | 41418010180 | Set plate | 1 | |
| | 6 | 41418010150 | Stopper | 1 | |
| | 7 | A06CB060120 | Hex. socket head cap screw | 2 | M6 x 12 |
| | 8 | A06CB100800 | Hex. socket head cap screw | 1 | M10 x 80 |
| | 9 | 41418011130 | T nut | 2 | |
| | 10 | A15B08X0200 | Hex. socket set screw | 1 | M8 x 20 (Flat point) |
| | 11 | A12006X0200 | Spring pin | 4 | ϕ6 x 25 |

## b) Inch system

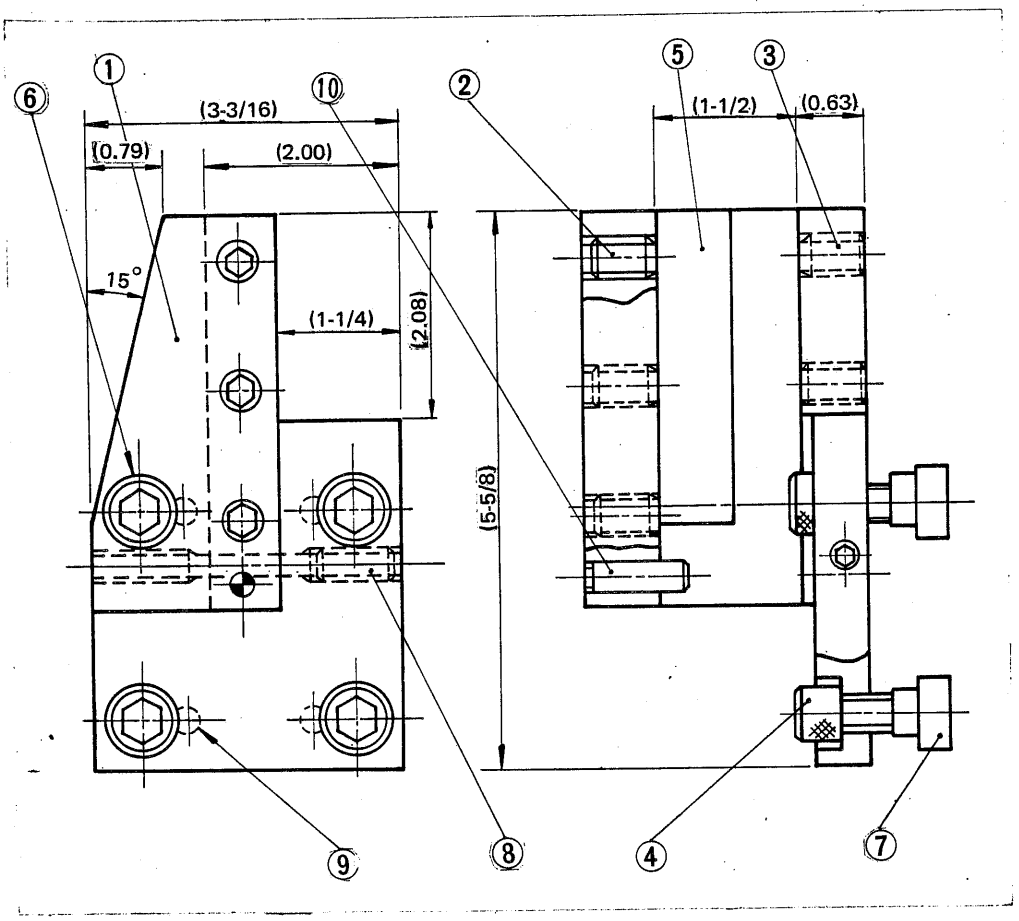


| Unit Code No. | No. | Parts Code No. | Designation | Q'ty. | Remarks |
|---|---|---|---|---|---|
| 51418056000<br><br>Turning holder<br>(Inch system) | 1 | 31418011841 | Turning holder | 1 | |
| | 2 | A15B10X0200 | Hex. socket set screw | 3 | M10 x 20 (Flat point) |
| | 3 | A15B10X0160 | Hex. socket set screw | 3 | M10 x 16 (Flat point) |
| | 4 | A06CB100250 | Hex. socket head cap screw | 3 | M10 x 25 |
| | 5 | 41418010180 | Set plate | 1 | |
| | 6 | A06CB100800 | Hex. socket head cap screw | 1 | M10 x 80 |
| | 7 | 41418011130 | T nut | 2 | |
| | 8 | A15B08X0200 | Hex. socket set screw | 1 | M8 x 20 (Flat point) |
| | 9 | A12006X0250 | Spring pin | 4 | ϕ6 x 25 |
| | 10 | 41418010140 | Pin | 2 | |

## 3-1-5 Turning holder (2)

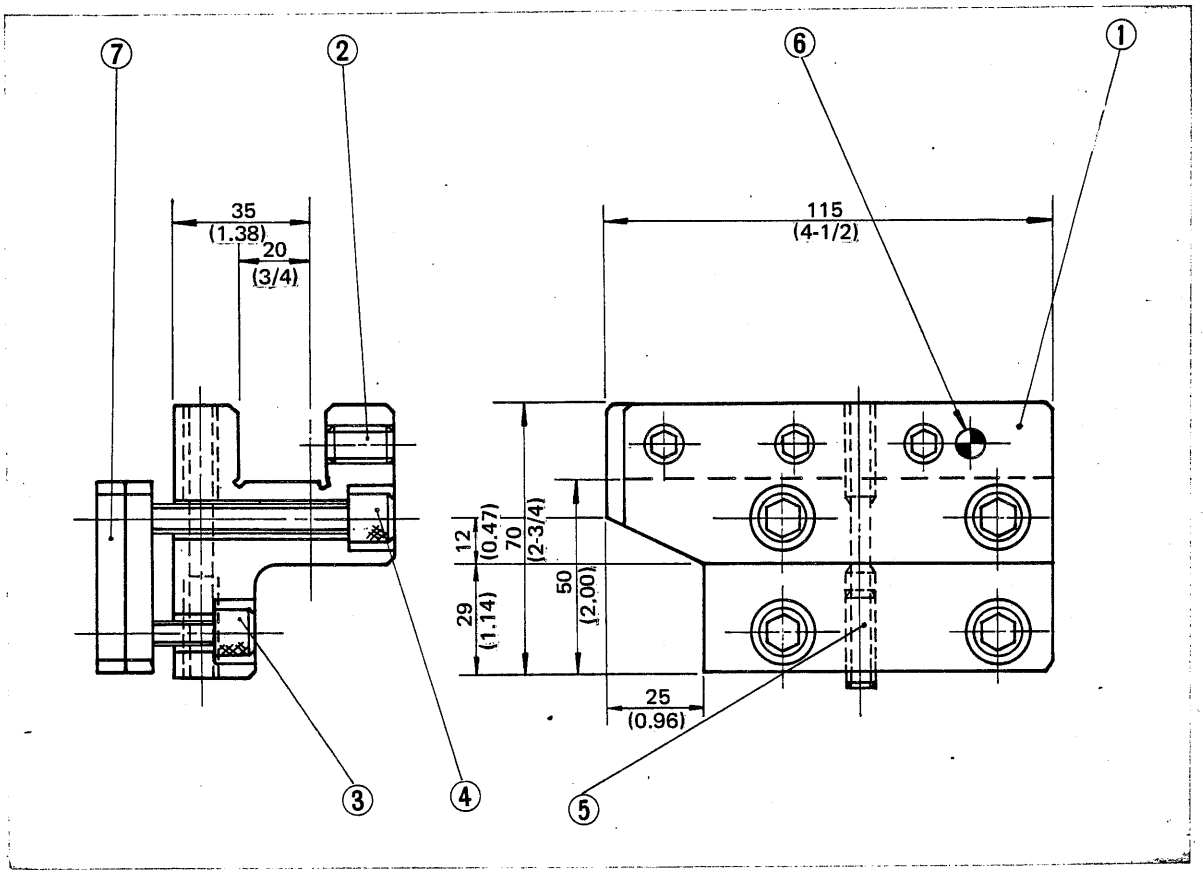


| Unit Code No. | No. | Parts Code No. | Designation | Q'ty | Remarks |
|---|---|---|---|---|---|
| 51418017000<br>Turning holder<br>(Metric system) | 1 | 31418011051 | Turning holder | 1 | |
| | 2 | A15B10X0200 | Hex. socket set screw | 3 | M10 x 20 (Flat point) |
| | 3 | A06CB100250 | Hex. socket head cap screw | 2 | M10 x 25 |
| | 4 | A06CB100600 | Hex. socket head cap screw | 2 | M10 x 60 |
| | 5 | A15B08X0200 | Hex. socket set screw | 1 | M8 x 20 (Flat point) |
| | 6 | 41418010140 | Pin | 1 | |
| | 7 | 41418011140 | T nut | 2 | |
| 51418057000<br>Turning holder<br>(Inch system) | 1 | 31418011851 | Turning holder | 1 | |
| | 2 | A15B10X0200 | Hex. socket set screw | 3 | M10 x 20 (Flat point) |
| | 3 | A06CB100250 | Hex. socket head cap screw | 2 | M10 x 25 |
| | 4 | A06CB100600 | Hex. socket head cap screw | 2 | M10 x 60 |
| | 5 | A15B08X0200 | Hex. socket set screw | 1 | M8 x 20 (Flat point) |
| | 6 | 41418010140 | Pin | 1 | |
| | 7 | 41418011140 | T nut | 2 | |

## 3-1-6 Turning holder (3)

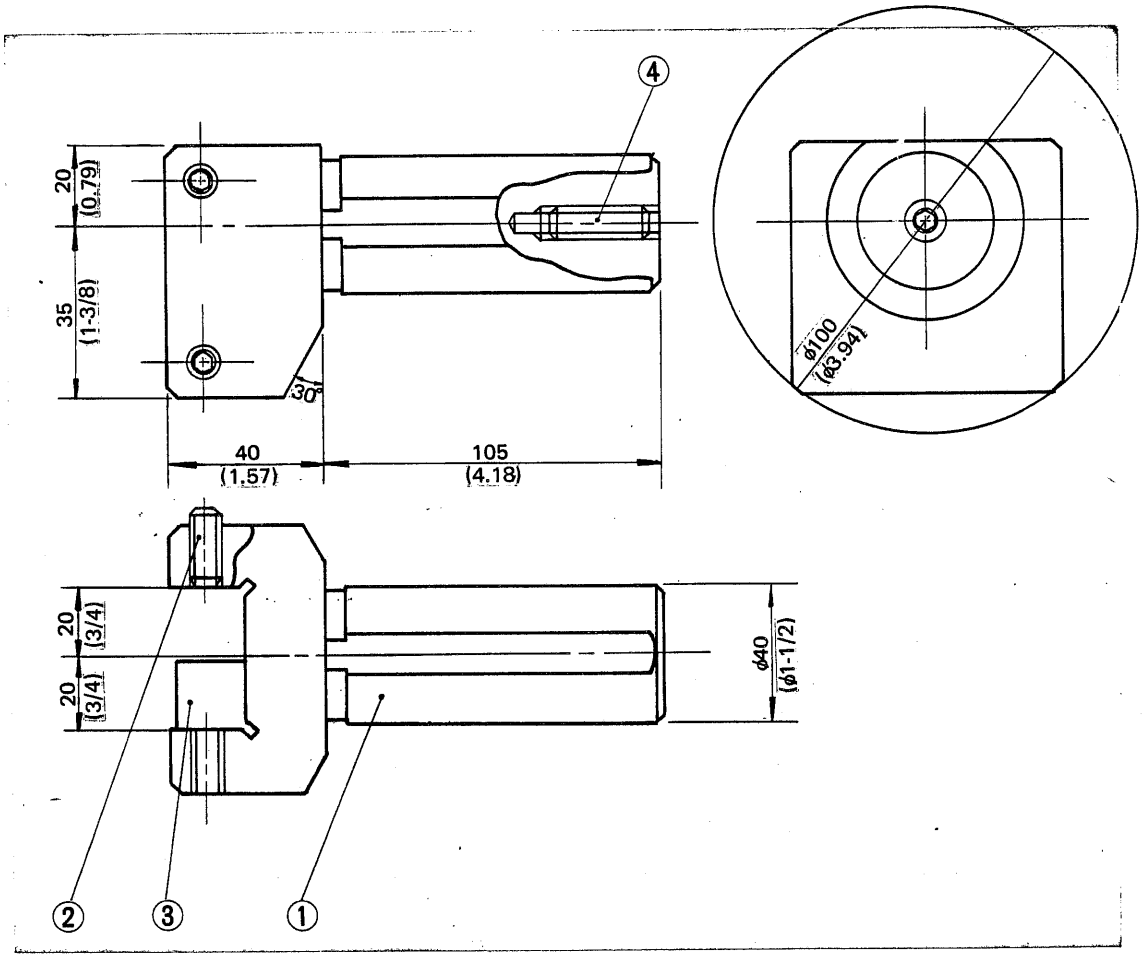


| Unit Code No. | No. | Parts Code No. | Designation | Q'ty | Remarks |
|---|---|---|---|---|---|
| 51418018000 Turning holder (Metric system) | 1 | 31418011061 | Turning holder | 1 | |
| | 2 | A15B10X0200 | Hex. socket set screw | 2 | M10 x 20 (Flat point) |
| | 3 | 41418010190 | Set plate | 1 | |
| | 4 | A15B08X0250 | Hex. socket set screw | 1 | M8 x 25 (Flat point) |
| 51418058000 Turning holder (Inch system) | 1 | 31418011861 | Turning holder | 1 | |
| | 2 | A15B10X0200 | Hex. socket set screw | 2 | M10 x 20 (Flat point) |
| | 3 | 41418010190 | Set plate | 1 | |
| | 4 | A15B08X0250 | Hex. socket set screw | 1 | M8 x 25 (Flat point) |

## 3-1-7 Turning holder (4)

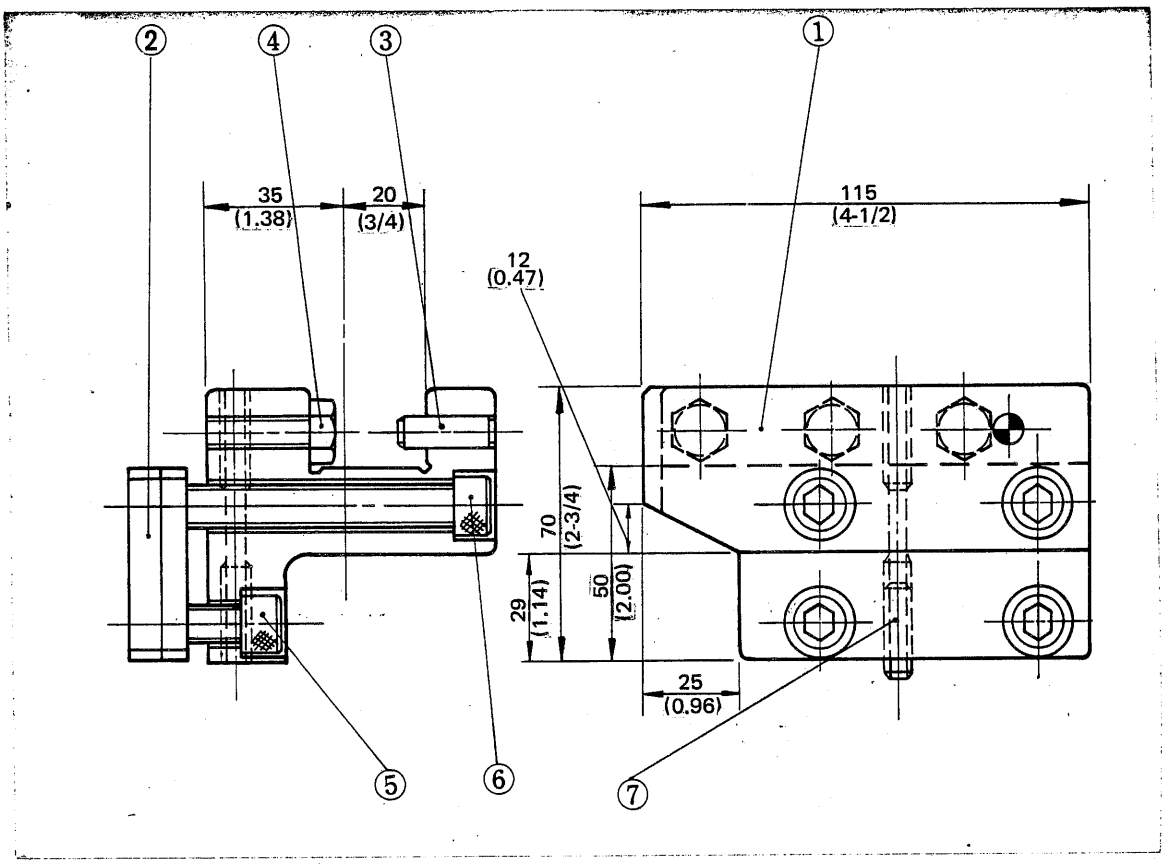


| Unit Code No. | No. | Parts Code No. | Designation | Q'ty | Remarks |
|---|---|---|---|---|---|
| 51418025000 Turning holder (Metric system) | 1 | 31418012012 | Turning holder | 1 | |
| | 2 | 41418011140 | T nut | 2 | |
| | 3 | 41418010140 | Pin | 1 | ϕ8 x 25 |
| | 4 | A17HD080160 | Hexagon head bolt | 3 | M8 x 16 |
| | 5 | A06CB100250 | Hex. socket head cap screw | 2 | M10 x 25 |
| | 6 | A06CB100800 | Hex. socket head cap screw | 2 | M10 x 80 |
| | 7 | A15B08X0200 | Hex. socket set screw | 1 | M8 x 20 (Flat point) |
| 51418065000 Turning holder (Inch system) | 1 | 31418012023 | Turning holder | 1 | |
| | 2 | 41418011140 | T nut | 2 | |
| | 3 | 41418010140 | Pin | 1 | ϕ8 x 25 |
| | 4 | A17HD080160 | Hexagon head bolt | 3 | M8 x 16 |
| | 5 | A06CB100250 | Hex. socket head cap screw | 2 | M10 x 25 |
| | 6 | A06CB100800 | Hex. socket head cap screw | 2 | M10 x 80 |
| | 7 | A15B08X0200 | Hex. socket set screw | 1 | M8 x 20 (Flat point) |

## 3-1-8 Facing holder (1)

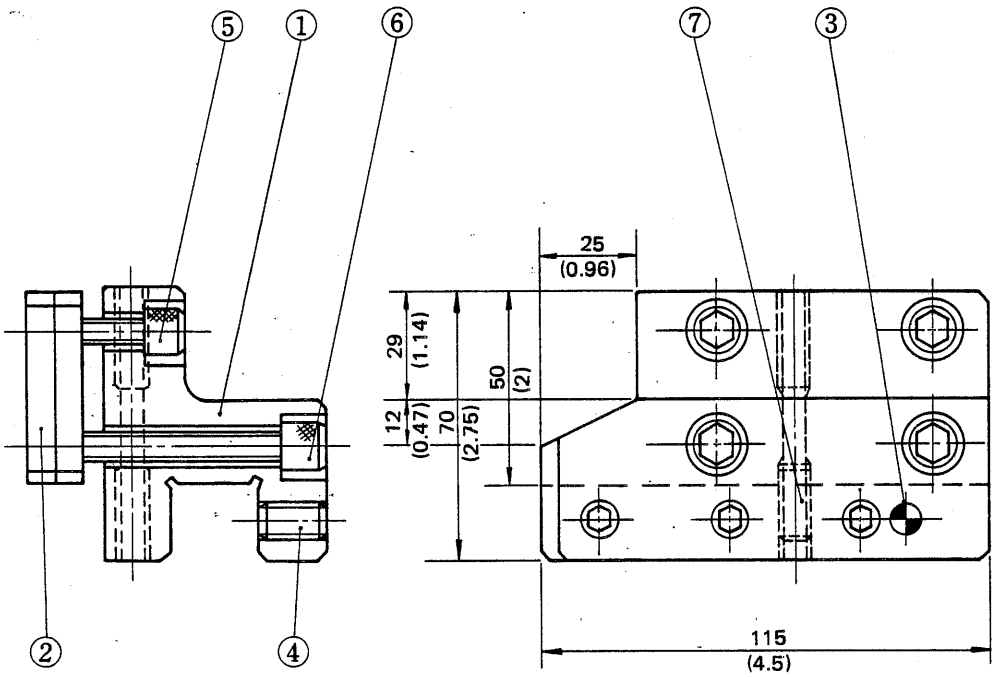


| Unit Code No. | No. | Parts Code No. | Designation | Q'ty | Remarks |
|---|---|---|---|---|---|
| 51418030000 | 1 | 31418013500 | Turning holder | 1 | |
| | 2 | 41418011140 | T nut | 2 | |
| | 3 | 41418010140 | Pin | 1 | |
| Turning holder (Metric system) | 4 | A15B10X0200 | Hex. socket set screw | 3 | M10 x 20 (Flat point) |
| | 5 | A06CB100250 | Hex. socket head cap screw | 2 | M10 x 25 |
| | 6 | A06CB100600 | Hex. socket head cap screw | 2 | M10 x 60 |
| | 7 | A15B08X0200 | Hex. socket set screw | 1 | M8 x 20 (Flat point) |
| 51418070000 | 1 | 31418013510 | Turning holder | 1 | |
| | 2 | 41418011140 | T nut | 2 | |
| | 3 | 41418010140 | Pin | 1 | |
| Turning holder (Inch system) | 4 | A15B10X0200 | Hex. socket set screw | 3 | M10 x 20 (Flat point) |
| | 5 | A06CB100250 | Hex. socket head cap screw | 2 | M10 x 25 |
| | 6 | A06CB100600 | Hex. socket head cap screw | 2 | M10 x 60 |
| | 7 | A15B08X0200 | Hex. socket head cap screw | 1 | M8 x 20 (Flat point) |

## 3-1-9 Facing holder (2)

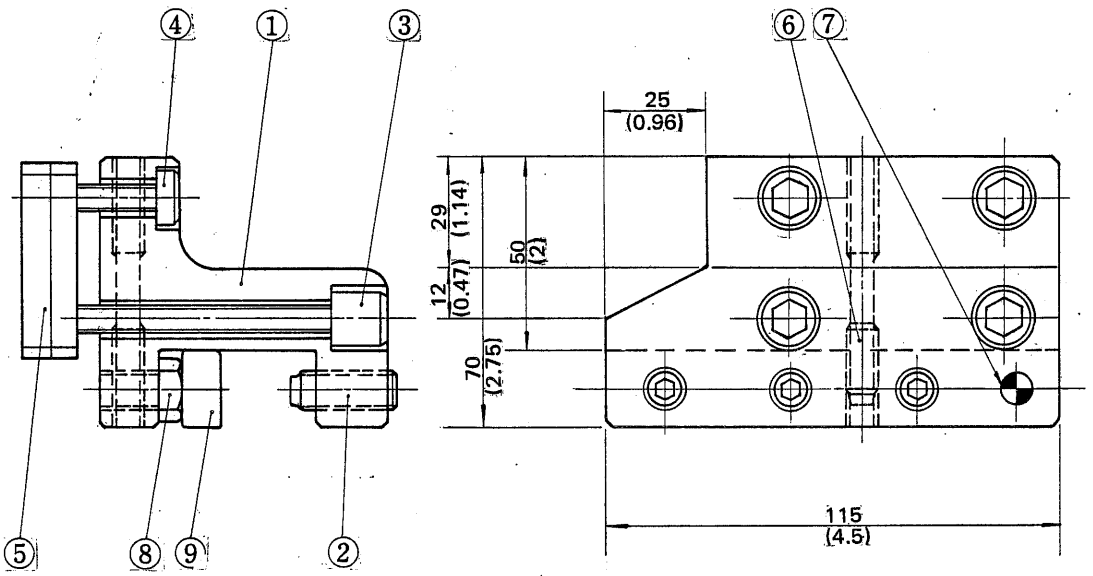


| Unit Code No. | No. | Parts Code No. | Designation | Q'ty | Remarks |
|---|---|---|---|---|---|
| 51418034000 | 1 | 31418014670 | Facing holder | 1 | |
| | 2 | A15A10X0200 | Hex. socket set screw | 3 | M10 x 30 (Dog point) |
| | 3 | A06CB100750 | Hex. socket head cap screw | 2 | M10 x 75 |
| Facing holder | 4 | A06CB100300 | Hex. socket head cap screw | 2 | M10 x 30 |
| (Metric system) | 5 | 41418011140 | T nut | 2 | |
| | 6 | A15A08X0200 | Hex. socket set screw | 1 | M8 x 20 (Dog point) |
| | 7 | A10008X0450 | Parallel pin | 1 | ϕ8 x 45 |
| | 8 | A17HB080150 | Hex. head bolt | 3 | M10 x 15 |
| | 9 | 41418014730 | Plate | 1 | |
| 51418074000 | 1 | 31418014680 | Facing holder | 1 | |
| | 2 | A15A10X0200 | Hex. socket set screw | 3 | M10 x 30 (Dog point) |
| | 3 | A06CB100750 | Hex. socket head cap screw | 2 | M10 x 75 |
| Facing holder | 4 | A06CB100300 | Hex. socket head cap screw | 2 | M10 x 30 |
| (Inch system) | 5 | 41418011140 | T nut | 2 | |
| | 6 | A15A08X0200 | Hex. socket set screw | 1 | M8 x 20 (Dog point) |
| | 7 | A10008X0450 | Parallel pin | 1 | ϕ8 x 45 |
| | 8 | A17HB080150 | Hex. head bolt | 3 | M10 x 15 |
| | 9 | 41418014730 | Plate | 1 | |

## 3-2 Octagonal drum turret

### 3-2-1 Facing holder

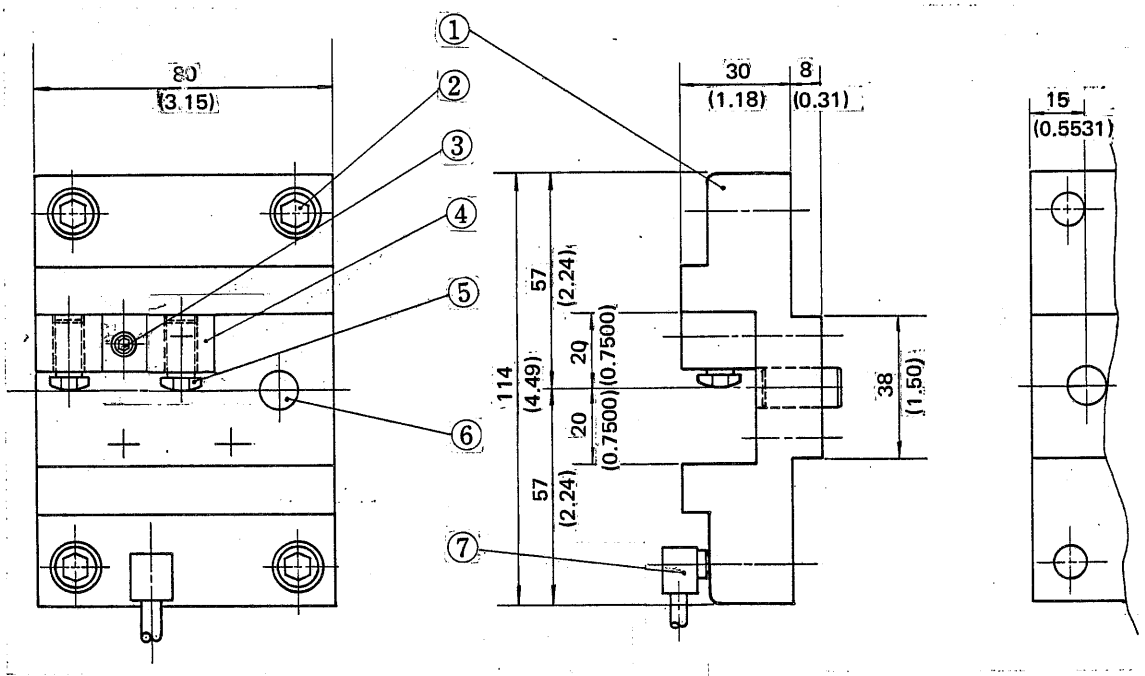


| Unit Code No. | No. | Parts Code No. | Designation | Q'ty | Remarks |
|---|---|---|---|---|---|
| 51418043000 | 1 | 21418015900 | Facing holder | 1 | |
| | 2 | A06CB080300 | Hex. socket head cap screw | 4 | M8 x 30 |
| | 3 | A06CB060250 | Hex. socket head cap screw | 1 | M6 x 25 |
| Facing holder (Metric system) | 4 | 41418015920 | Block | 1 | |
| | 5 | 41411539850 | Bolt | 2 | |
| | 6 | A10010X0200 | Straight pin | 1 | ϕ10 x 20 |
| | 7 | H10SF0PH620 | Elbow | 1 | PH6-2 |
| 51418083000 | 1 | 21418015890 | Facing holder | 1 | |
| | 2 | A06CB080300 | Hex. socket head cap screw | 4 | M8 x 30 |
| | 3 | A06CB060250 | Hex. socket head cap screw | 1 | M6 x 25 |
| Facing holder (Inch system) | 4 | 41418015920 | Block | 1 | |
| | 5 | 41411539850 | Bolt | 2 | |
| | 6 | A10010X0200 | Straight pin | 1 | ϕ10 x 20 |
| | 7 | H10SF0PH620 | Elbow | 1 | PH6-2 |

## 3-2-2 Boring bar holder

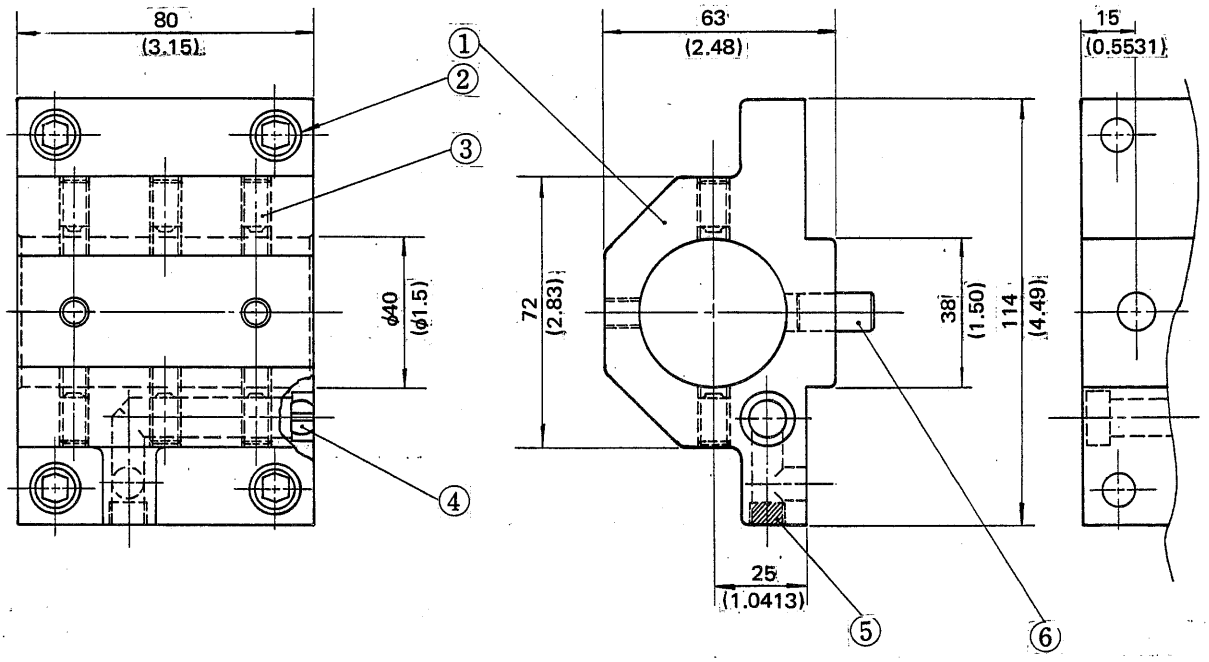


| Unit Code No. | No. | Parts Code No. | Designation | Q'ty | Remarks |
|---|---|---|---|---|---|
| 51418044001 | 1 | 21418015882 | Boring bar holder | 1 | |
| | 2 | A06CB080250 | Hex. socket head cap screw | 4 | M8 x 25 |
| | 3 | A15A08X0120 | Hex. socket set screw | 6 | M8 x 12 (Dog point) |
| Boring bar holder (Metric system) | 4 | E000PB4E010 | Nozzle | 1 | PBA4E01 |
| | 5 | H3600001S80 | Hex. socket pipe plug | 1 | PT1/8 |
| | 6 | A10010X0200 | Straight pin | 1 | φ10 x 20 |
| 51418084001 | 1 | 21418015912 | Boring bar holder | 1 | |
| | 2 | A06CB080250 | Hex. socket head cap screw | 4 | M8 x 25 |
| | 3 | A15A08X0120 | Hex. socket set screw | 6 | M8 x 12 (Dog point) |
| Boring bar holder (Inch system) | 4 | E000PB4E010 | Nozzle | 1 | PBA4E01 |
| | 5 | H3600001S80 | Hex. socket pipe plug | 1 | PT1/8 |
| | 6 | A10010X0200 | Straight pin | 1 | φ10 x 20 |

## 3-2-3 U drill holder

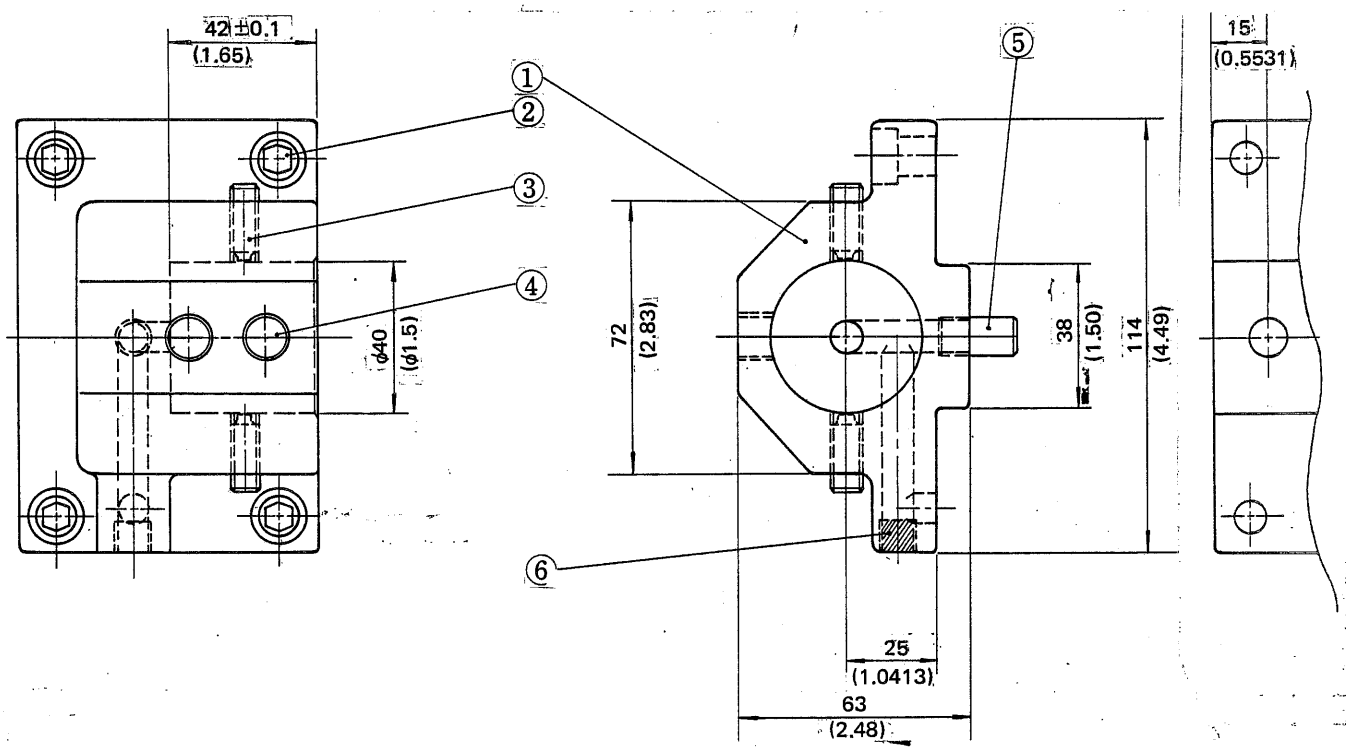


| Unit Code No. | No. | Parts Code No. | Designation | Q'ty | Remarks |
|---|---|---|---|---|---|
| 51418045000 | 1 | 21418016210 | U drill holder | 1 | |
| | 2 | A06CB080250 | Hex. socket head cap screw | 4 | M8 x 25 |
| U drill holder (Metric system) | 3 | A15A08X0200 | Hex. socket set screw | 2 | M8 x 20 (Dog point) |
| | 4 | A15A12X0150 | Hex. socket set screw | 2 | M12 x 15 (Dog point) |
| | 5 | A10010X0200 | Straight pin | 1 | φ10 x 20 |
| | 6 | H3600001S80 | Hex. socket pipe plug | 2 | PT1/8 |
| 51418085000 | 1 | 21418016220 | U drill holder | 1 | |
| | 2 | A06CB080250 | Hex. socket head cap screw | 4 | M8 x 25 |
| U drill holder (Inch system) | 3 | A15A08X0200 | Hex. socket set screw | 2 | M8 x 20 (Dog point) |
| | 4 | A15A12X0150 | Hex. socket set screw | 2 | M12 x 15 (Dog point) |
| | 5 | A10010X0200 | Straight pin | 1 | φ10 x 20 |
| | 6 | H3600001S80 | Hex. socket pipe plug | 2 | PT1/8 |

## 3-2-4 U drill socket (ϕ20, ϕ25, ϕ32)

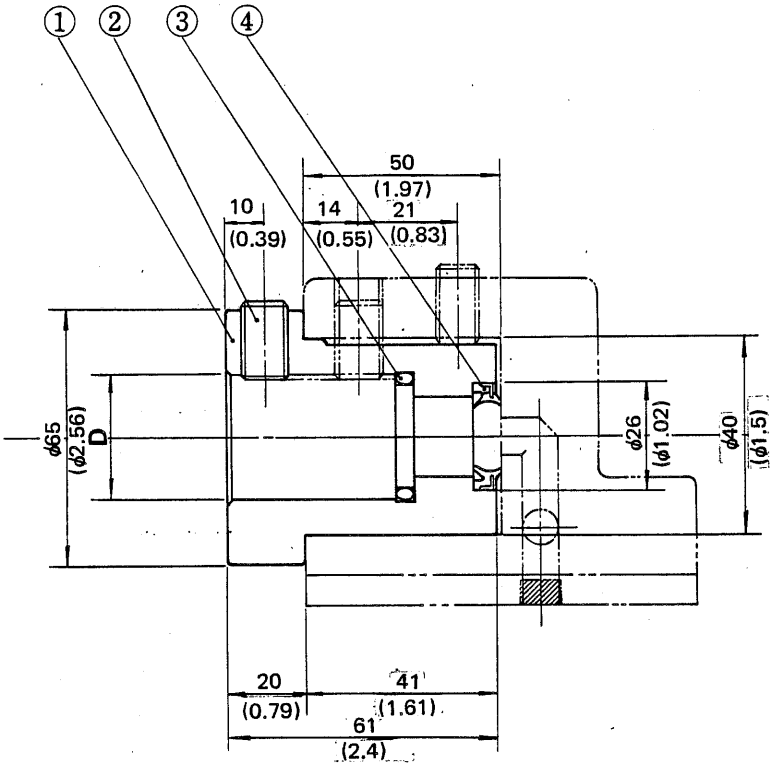


| Unit Code No. | No. | Parts Code No. | Designation | Q'ty | Remarks |
|---|---|---|---|---|---|
| 51418035000 | 1 | 41418016230 | U drill socket | 1 | D = ϕ20 mm |
| U drill socket (ϕ20) | 2 | A15A12X0250 | Hex. socket set screw | 1 | M12 x 25 (Dog point) |
| (Metric system) | 3 | J2600P01600 | O ring | 1 | P16 |
| | 4 | J04SH001230 | Scraper | 1 | SCB-16 |
| 51418036000 | 1 | 41418016240 | U drill socket | 1 | D = ϕ25 mm |
| U drill socket (ϕ25) | 2 | A15A12X0250 | Hex. socket set screw | 1 | M12 x 25 (Dog point) |
| (Metric system) | 3 | J2600P02200 | O ring | 1 | P22 |
| | 4 | J04SH001230 | Scraper | 1 | SCB-16 |
| 51418037000 | 1 | 4148016250 | U drill socket | 1 | D = ϕ32 mm |
| U drill socket (ϕ32) | 2 | A15A12X0250 | Hex. socket set screw | 1 | M12X25 (Dog point) |
| (Metric system) | 3 | J2600P02600 | O ring | 1 | P26 |
| | 4 | J04SH001230 | Scraper | 1 | SCB-16 |
| 51418075000 | 1 | 41418016260 | U drill socket | 1 | D = ϕ20 mm |
| U drill socket (ϕ20) | 2 | A15A12X0250 | Hex. socket set screw | 1 | M12 x 25 (Dog point) |
| (Inch system) | 3 | J2600P01600 | O ring | 1 | P16 |
| | 4 | J04SH001230 | Scraper | 1 | SCB-16 |
| 51418076000 | 1 | 41418016270 | U drill socket | 1 | D = ϕ25 mm |
| U drill socket (ϕ25) | 2 | A15A12X0250 | Hex. socket set screw | 1 | M12 x 25 (Dog point) |
| (Inch system) | 3 | J2600P02200 | O ring | 1 | P22 |
| | 4 | J04SH001230 | Scraper | 1 | SCB-16 |
| 51418077000 | 1 | 41418016280 | U drill socket | 1 | D = ϕ32 mm |
| U drill socket (ϕ32) | 2 | A15A12X0250 | Hex. socket set screw | 1 | M12 x 25 (Dog point) |
| (Inch system) | 3 | J2600P02600 | O ring | 1 | P26 |
| | 4 | J04SH001230 | Scraper | 1 | SCB-16 |

## 3-3 Interchangeable holders

### 3-3-1 Boring bar socket

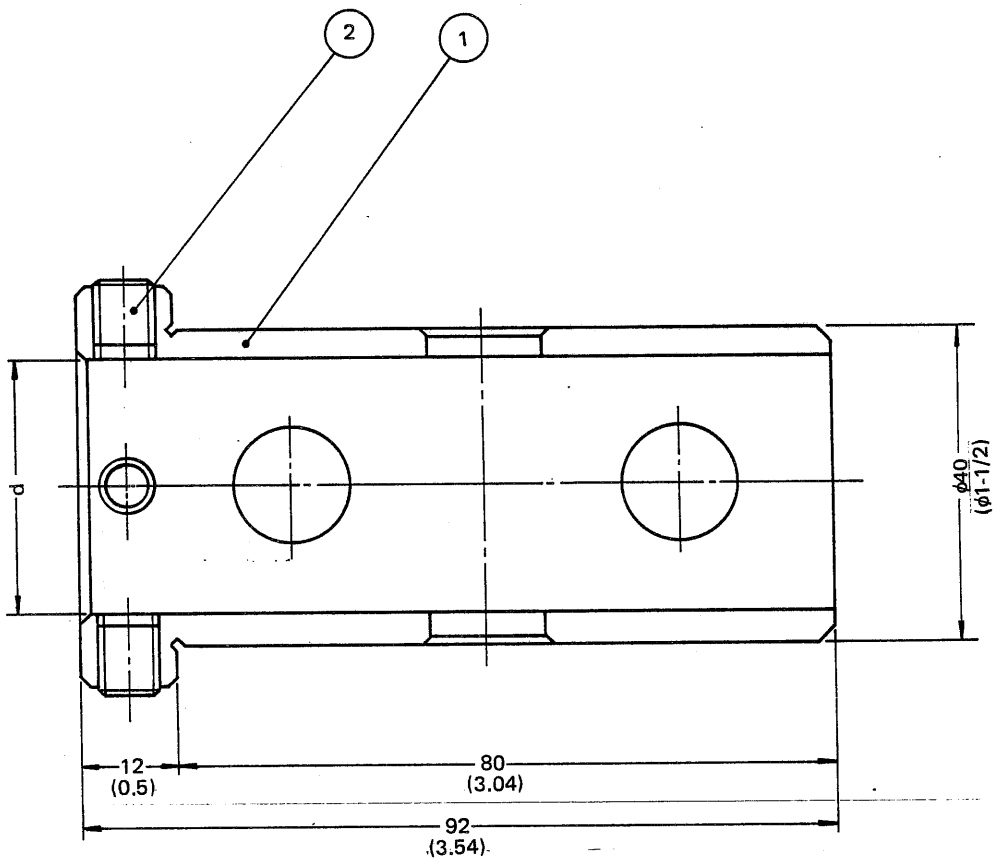


| Unit Code No. | No. | Parts Code No. | Designation | Q'ty | Remarks |
|---|---|---|---|---|---|
| 51418019001 | 1 | 41418011071 | Boring bar socket | 1 | d=ϕ32 mm |
| | 2 | A15B08X0100 | Hex. socket set screw | 3 | M8 x 10 (Flat point) |
| 51418020001 | 1 | 41418011081 | Boring bar socket | 1 | d2ϕ25 mm |
| | 2 | A15B08X0120 | Hex. socket set screw | 3 | M8 x 10 (Flat point) |
| 51418059001 | 1 | 41418011871 | Boring bar socket | 1 | d=1-1/4" |
| | 2 | A15B08X0100 | Hex. socket set screw | 3 | M8 x 10 (Flat point) |
| 51418060001 | 1 | 41418011881 | Boring bar socket | 1 | d=1" |
| | 2 | A15B08X0120 | Hex. socket set screw | 3 | M8 x 10 (Flat point) |

## 3-3-2 Boring bar sleeve

### a) Metric system

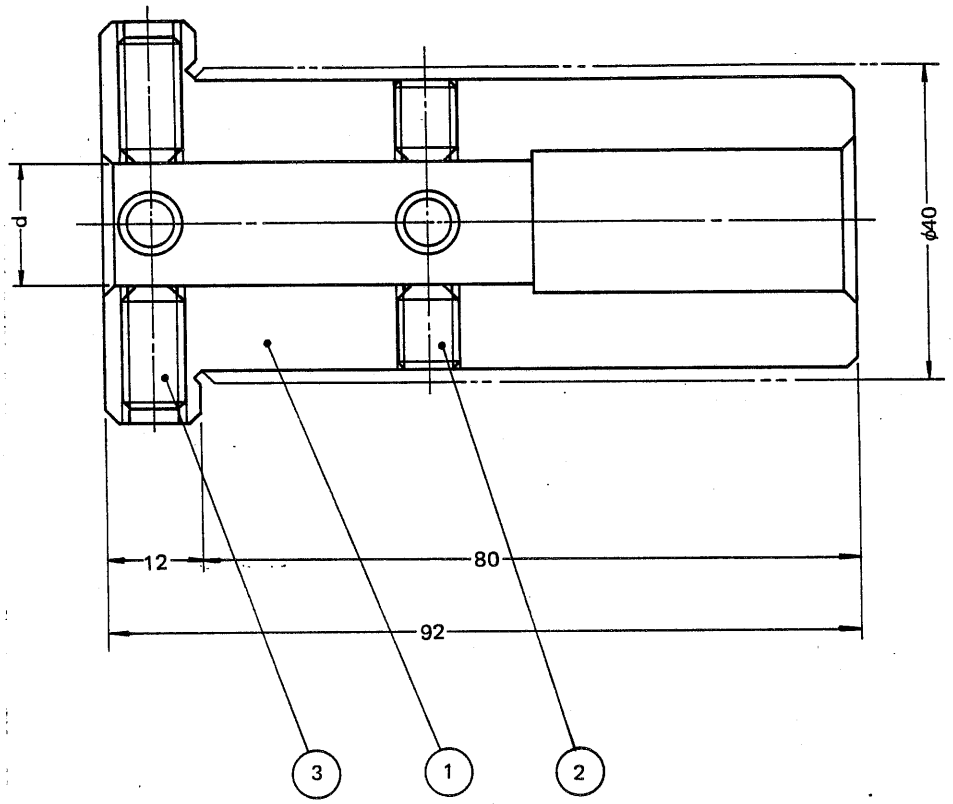


| Unit Code No. | No. | Parts Code No. | Designation | Q'ty | Remarks |
|---|---|---|---|---|---|
| 51418021001 | 1 | 41418011092 | Boring bar sleeve | 1 | d=ϕ20 mm |
| Boring bar sleeve (Metric system) | 2 | A15B08X0080 | Hex. socket set screw | 3 | M8 x 8 (Flat point) |
| | 3 | A15B08X0160 | Hex. socket set screw | 3 | M8 x 16 (Flat point) |
| 51418022001 | 1 | 41418011102 | Boring bar sleeve | 1 | d=ϕ16 mm |
| Boring bar sleeve (Metric system) | 2 | A15B08X0100 | Hex. socket set screw | 3 | M8 x 10 (Flat point) |
| | 3 | A15B08X0160 | Hex. socket set screw | 3 | M8 x 16 (Flat point) |
| 51418023001 | 1 | 41418011112 | Boring bar sleeve | 1 | d=ϕ12 mm |
| Boring bar sleeve (Metric system) | 2 | A15B08X0120 | Hex. socket set screw | 3 | M8 x 12 (Flat point) |
| | 3 | A15B08X0160 | Hex. socket set screw | 3 | M8 x 16 (Flat point) |
| 51418026001 | 1 | 41418013701 | Boring bar sleeve | 1 | d=ϕ8 mm |
| Boring bar sleeve (Metric system) | 2 | A15B05X0120 | Hex. socket set screw | 3 | M5 x 12 (Flat point) |
| | 3 | A15B05X0160 | Hex. socket set screw | 3 | M5 x 16 (Flat point) |
| 51418027001 | 1 | 41418013711 | Boring bar sleeve | 1 | d=ϕ10 mm |
| Boring bar sleeve (Metric system) | 2 | A15B05X0120 | Hex. socket set screw | 3 | M5 x 12 (Flat point) |
| | 3 | A15B05X0160 | Hex. socket set screw | 3 | M5 x 16 (Flat point) |

## b) Inch system

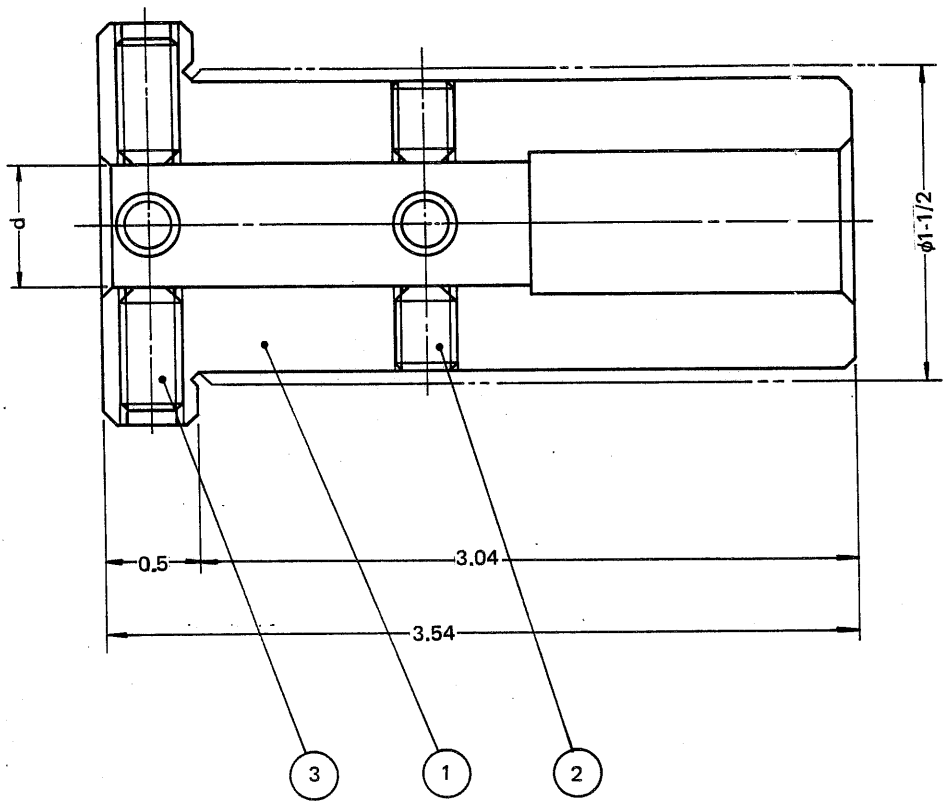


| Unit Code No. | No. | Parts Code No. | Designation | Q'ty | Remarks |
|---|---|---|---|---|---|
| 51418061001 | 1 | 41418011891 | Boring bar sleeve | 1 | d=ϕ3/4" |
| Boring bar sleeve (Inch system) | 2 | A15B08X0080 | Hex. socket set screw | 3 | M8 x 8 (Flat point) |
| | 3 | A15B08X0160 | Hex. socket set screw | 3 | M8 x 16 (Flat point) |
| 51418062001 | 1 | 41418011901 | Boring bar sleeve | 1 | d=ϕ5/8" |
| Boring bar sleeve (Inch system) | 2 | A15B08X0100 | Hex. socket set screw | 3 | M8 x 10 (Flat point) |
| | 3 | A15B08X0160 | Hex. socket set screw | 3 | M8 x 16 (Flat point) |
| 51418063001 | 1 | 41418011911 | Boring bar sleeve | 1 | d=ϕ1/2" |
| Boring bar sleeve (Inch system) | 2 | A15B08X0120 | Hex. socket set screw | 3 | M8 x 12 (Flat point) |
| | 3 | A15B08X0160 | Hex. socket set screw | 3 | M8 x 16 (Flat point) |
| 51418066001 | 1 | 41418014941 | Boring bar sleeve | 1 | d=ϕ5/16" |
| Boring bar sleeve (Inch system) | 2 | A15B05X0120 | Hex. socket set screw | 3 | M5 x 12 (Flat point) |
| | 3 | A15B05X0160 | Hex. socket set screw | 3 | M5 x 16 (Flat point) |
| 51418067001 | 1 | 41418014951 | Boring bar sleeve | 1 | d=ϕ3/8" |
| Boring bar sleeve (Inch system) | 2 | A15B05X0120 | Hex. socket set screw | 3 | M5 x 12 (Flat point) |
| | 3 | A15B05X0160 | Hex. socket set screw | 3 | M5 x 16 (Flat point) |

## 3-3-3 Drill socket (M.T.)

### a) Metric system

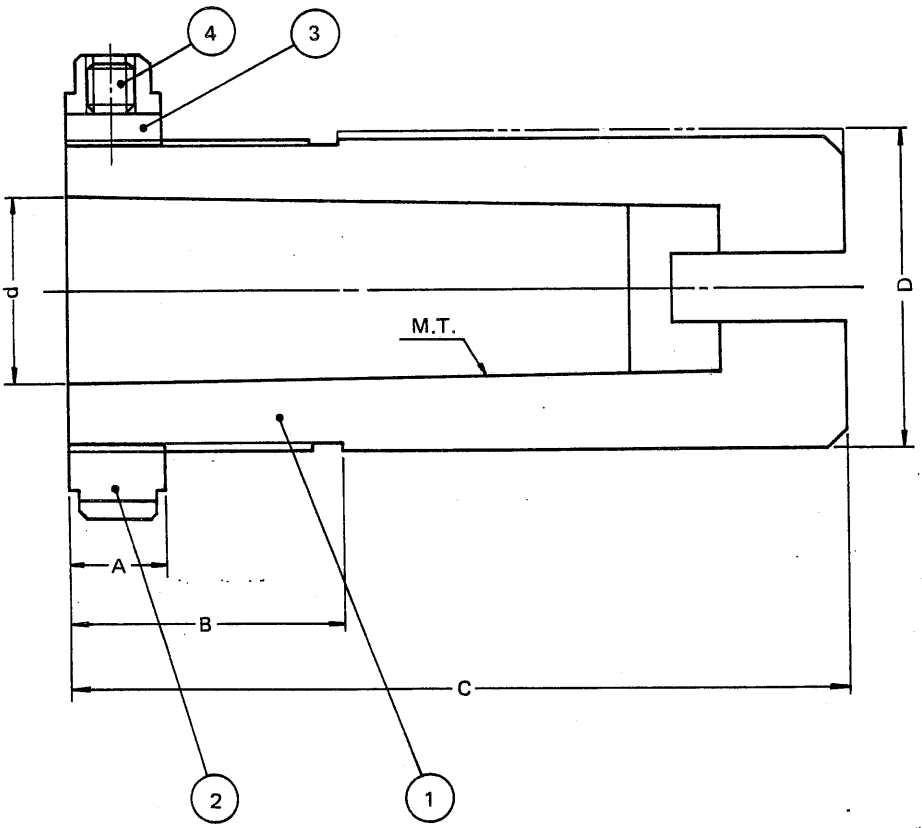


| | A | B | C | D | d |
|---|---|---|---|---|---|
| M.T. No. 3 | 12 | 35 | 92 | ϕ40 | ϕ23.825 |
| M.T. No. 2 | 12 | 25 | 80 | ϕ40 | ϕ17.780 |
| M.T. No. 1 | 12 | 20 | 70 | ϕ40 | ϕ12.065 |

| Unit Code No. | No. | Parts Code No. | Designation | Q'ty | Remarks |
|---|---|---|---|---|---|
| 51418024001 | 1 | 41418011121 | Drill socket | 1 | M.T. No. 3 |
| Drill socket M.T. No. 3 (Metric system) | 2 | 41568006670 | Nut | 1 | |
| | 3 | 41568006680 | Pad | 1 | |
| | 4 | A15B06X0060 | Hex. socket set screw | 1 | M6 x 6 (Flat point) |
| 51418029000 | 1 | 41418013730 | Drill socket | 1 | M.T. No. 2 |
| Drill socket M.T. No. 2 (Metric system) | 2 | 41568006670 | Nut | 1 | |
| | 3 | 41568006680 | Pad | 1 | |
| | 4 | A15B06X0060 | Hex. socket set screw | 1 | M6 x 6 (Flat point) |
| 51418028000 | 1 | 41418013720 | Drill socket | 1 | M.T. No. 1 |
| Drill socket M.T. No. 1 (Metric system) | 2 | 41568006670 | Nut | 1 | |
| | 3 | 41568006680 | Pad | 1 | |
| | 4 | A15B06X0060 | Hex. socket set screw | 1 | M6 x 6 (Flat point) |

## b) Inch system

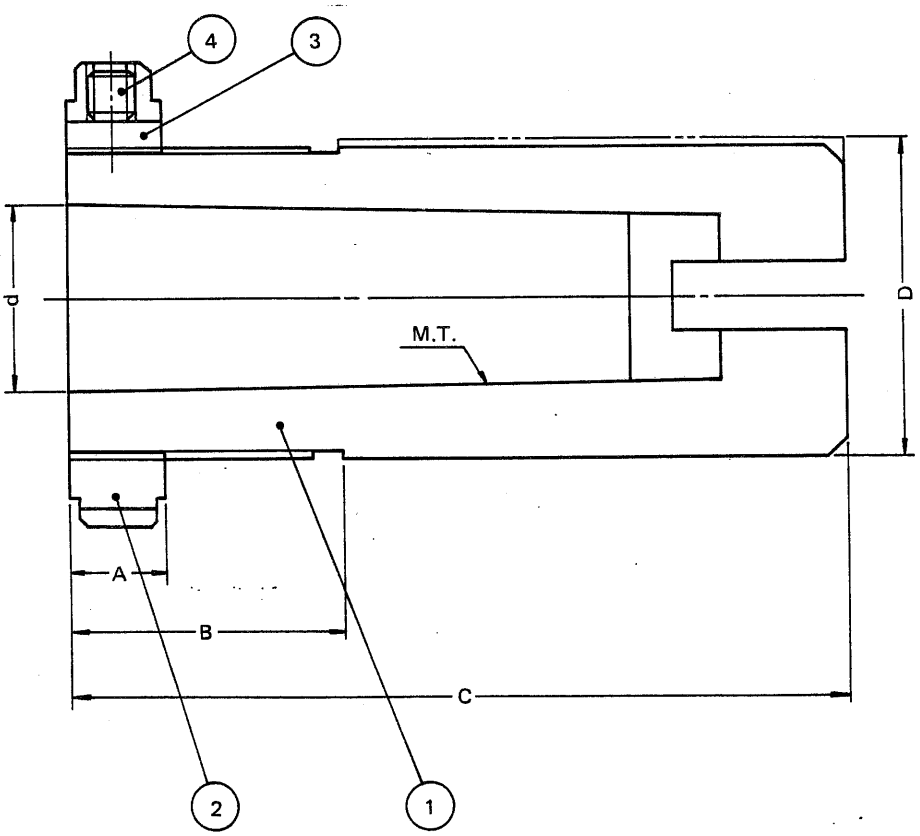


| | A | B | C | D | d |
|---|---|---|---|---|---|
| M.T. No. 3 | 0.47 | 1.38 | 3.62 | ϕ1-1/2 | ϕ0.93799 |
| M.T. No. 2 | 0.47 | 0.98 | 3.15 | ϕ1-1/2 | ϕ0.7 |
| M.T. No. 1 | 0.47 | 0.79 | 2.76 | ϕ1-1/2 | ϕ0.475 |

| Unit Code No. | No. | Parts Code No. | Designation | Q'ty | Remarks |
|---|---|---|---|---|---|
| 51418064001 | 1 | 41418011921 | Drill socket | 1 | M.T. No. 3 |
| Drill socket M.T. No. 3 (Inch system) | 2 | 41568006670 | Nut | 1 | |
| | 3 | 41568006680 | Pad | 1 | |
| | 4 | A15B06X0060 | Hex. socket set screw | 1 | M6 x 6 (Flat point) |
| 51418069000 | 1 | 41418014970 | Drill socket | 1 | M.T. No. 2 |
| Drill socket M.T. No. 2 (Inch system) | 2 | 41568006670 | Nut | 1 | |
| | 3 | 41568006680 | Pad | 1 | |
| | 4 | A15B06X0060 | Hex. socket set screw | 1 | M6 x 6 (Flat point) |
| 51418068000 | 1 | 41418014960 | Drill socket | 1 | M.T. No. 1 |
| Drill socket M.T. No. 1 (Inch system) | 2 | 41568006670 | Nut | 1 | |
| | 3 | 41568006680 | Pad | 1 | |
| | 4 | A15B06X0060 | Hex. socket set screw | 1 | M6 x 6 (Flat point) |

# 4. PROGRAMMING CHART

## 4-1 Octagonal drum turret

### 4-1-1 Chucker type

#### a) Metric system

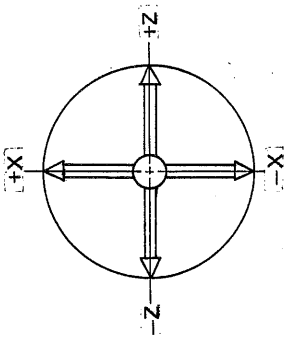


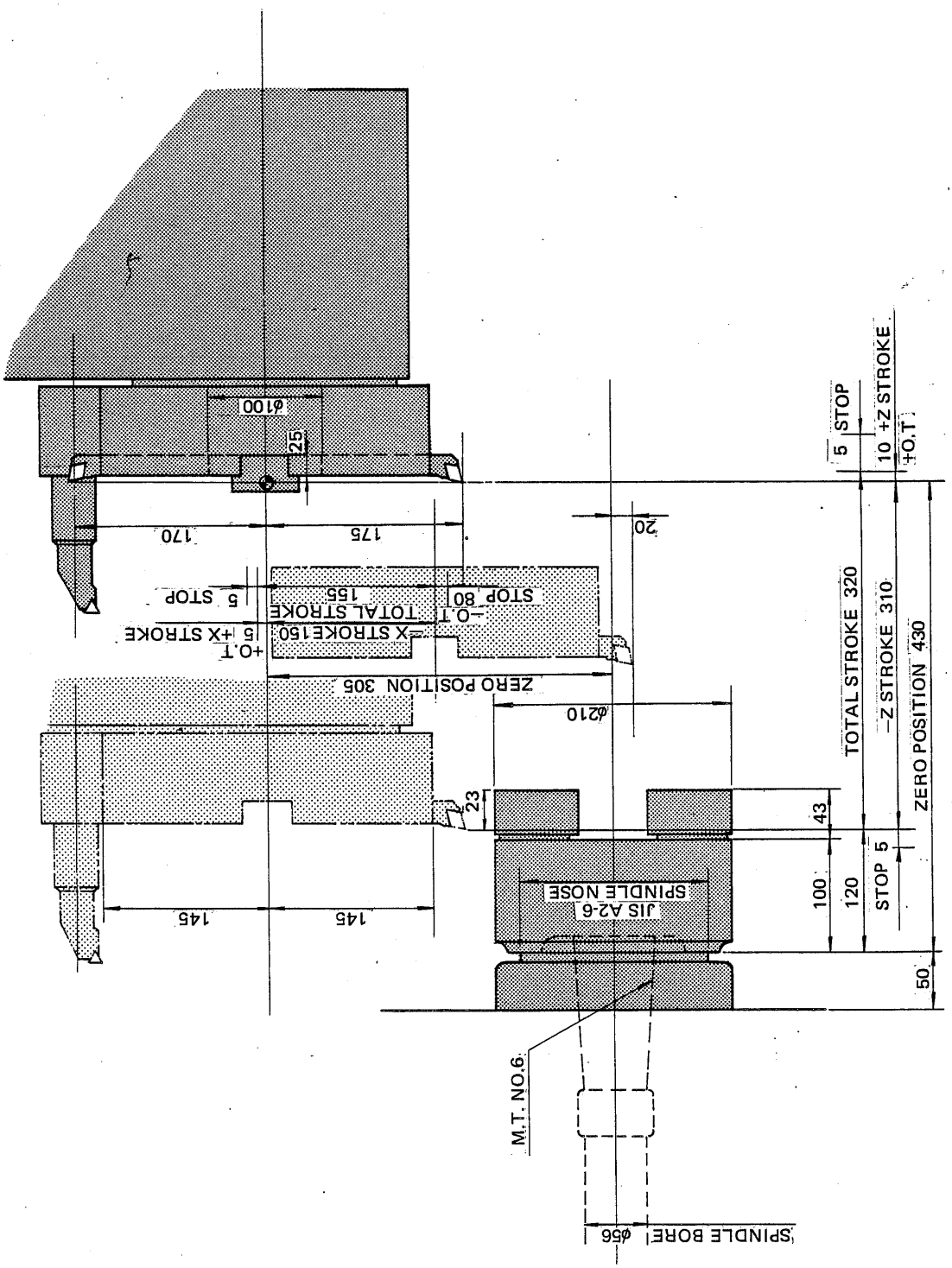

**b) Inch system**

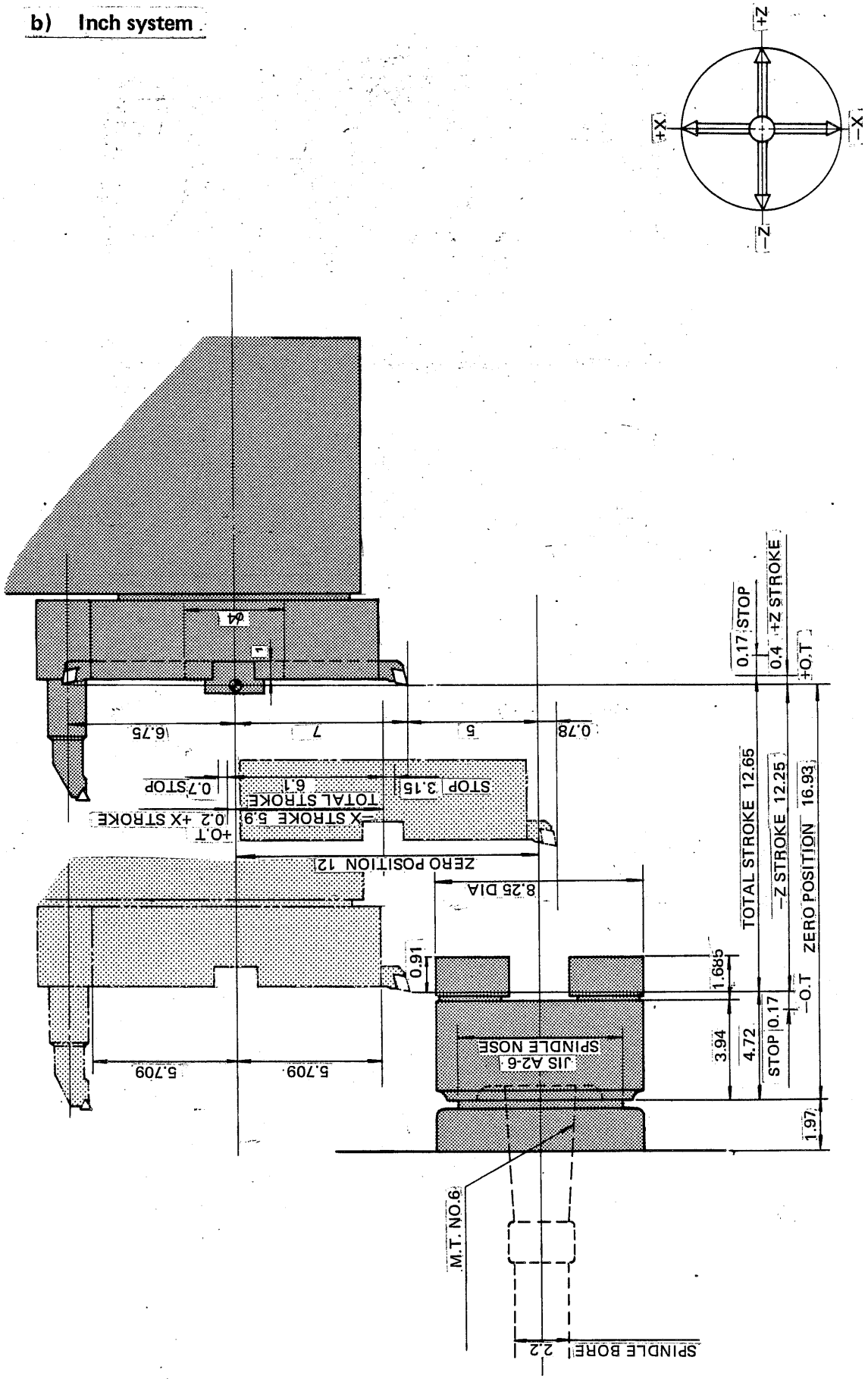

## 4-1-2 Universal type

### a) Metric system

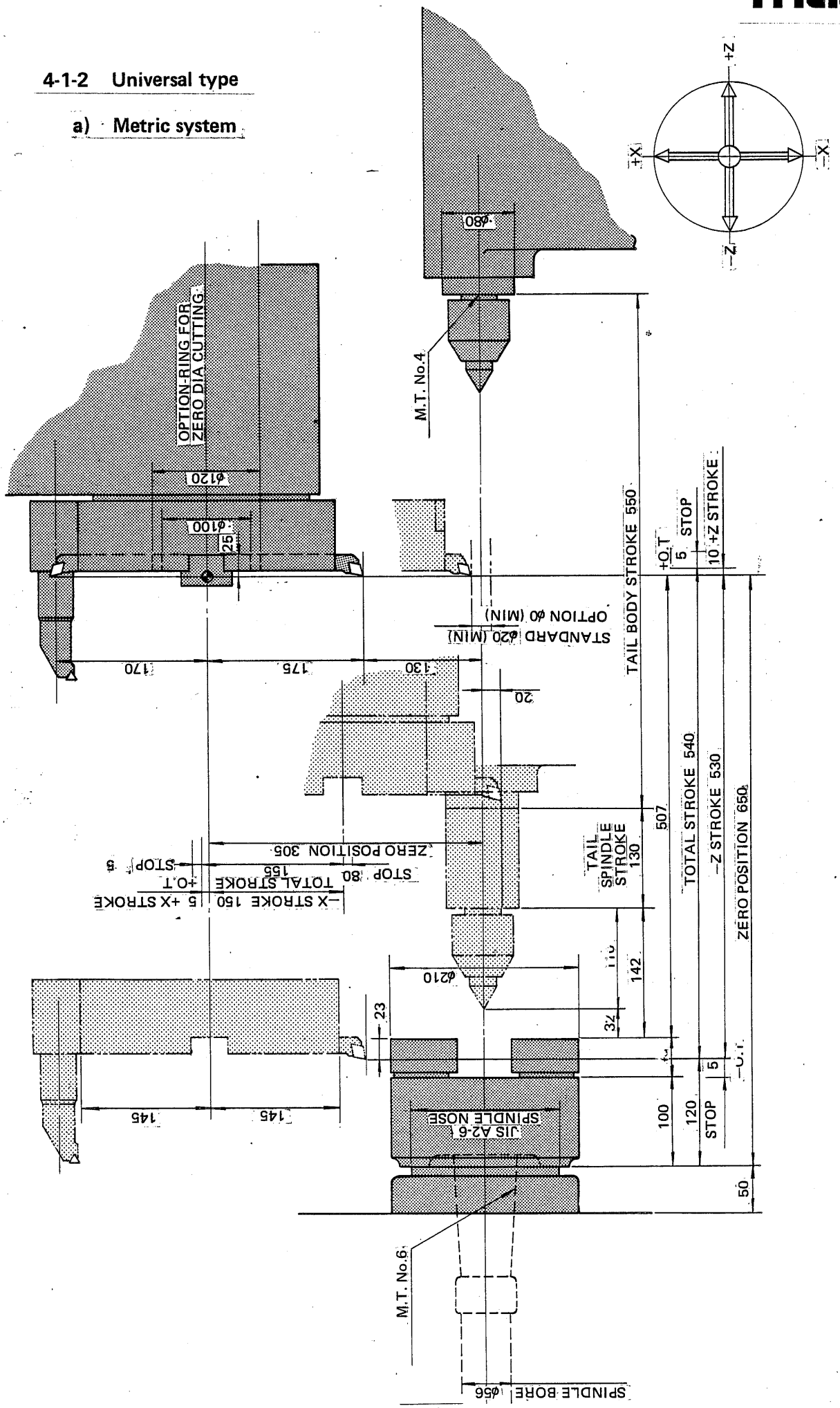

## b) Inch system

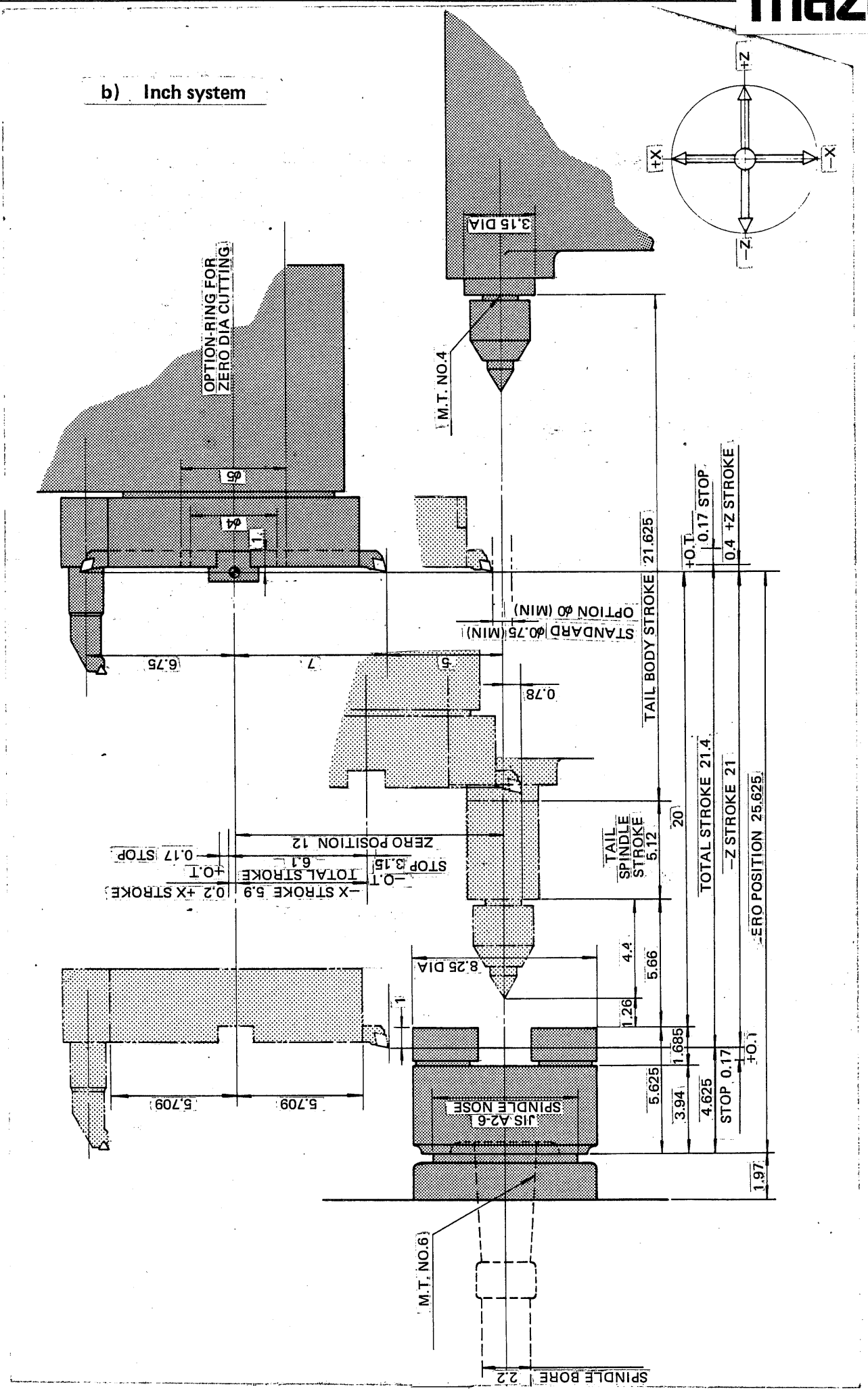

## 4-2 12-side drum turret

### 4-2-1 Chucker type

#### a) Metric system

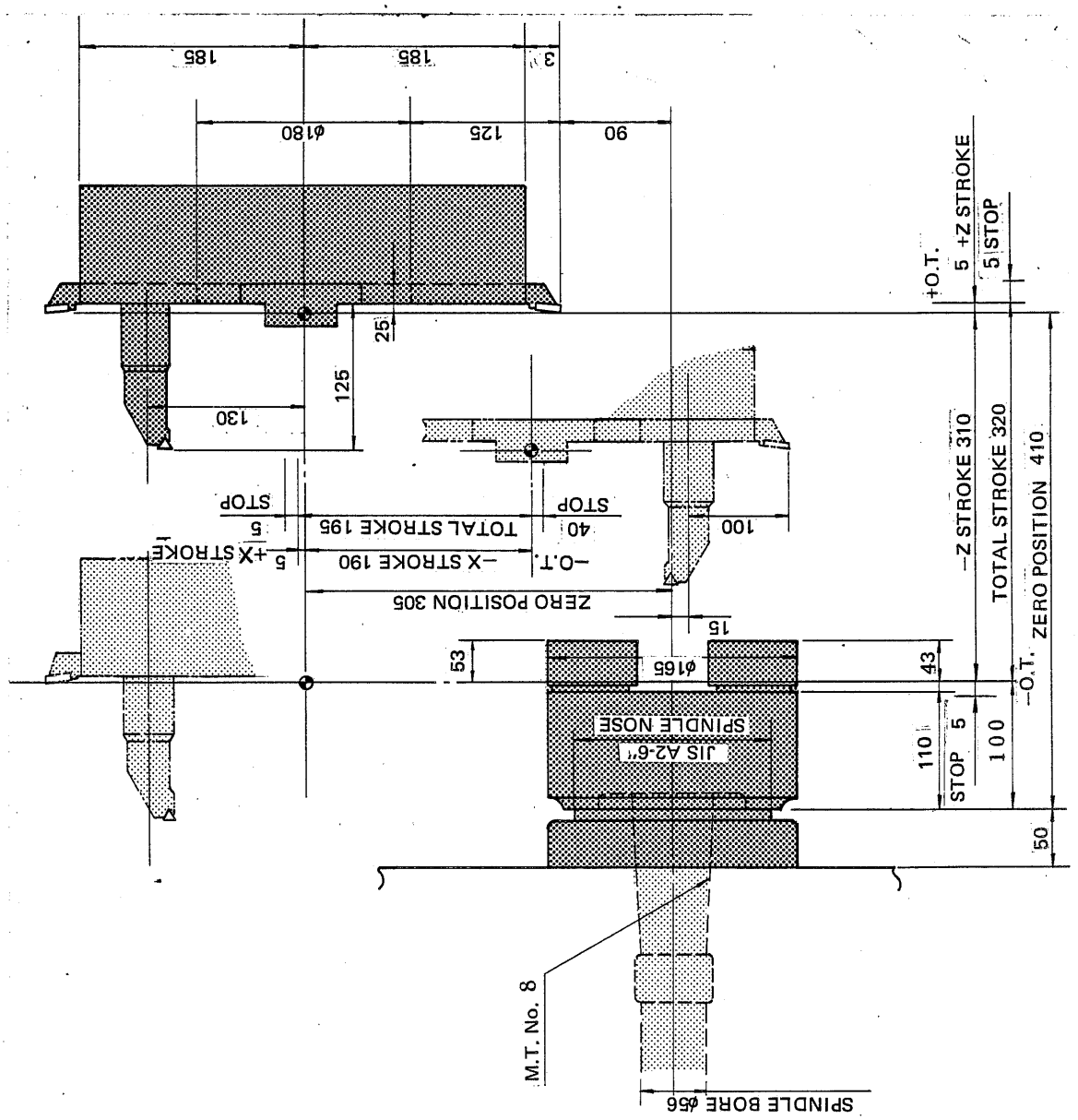

**b) Inch system**

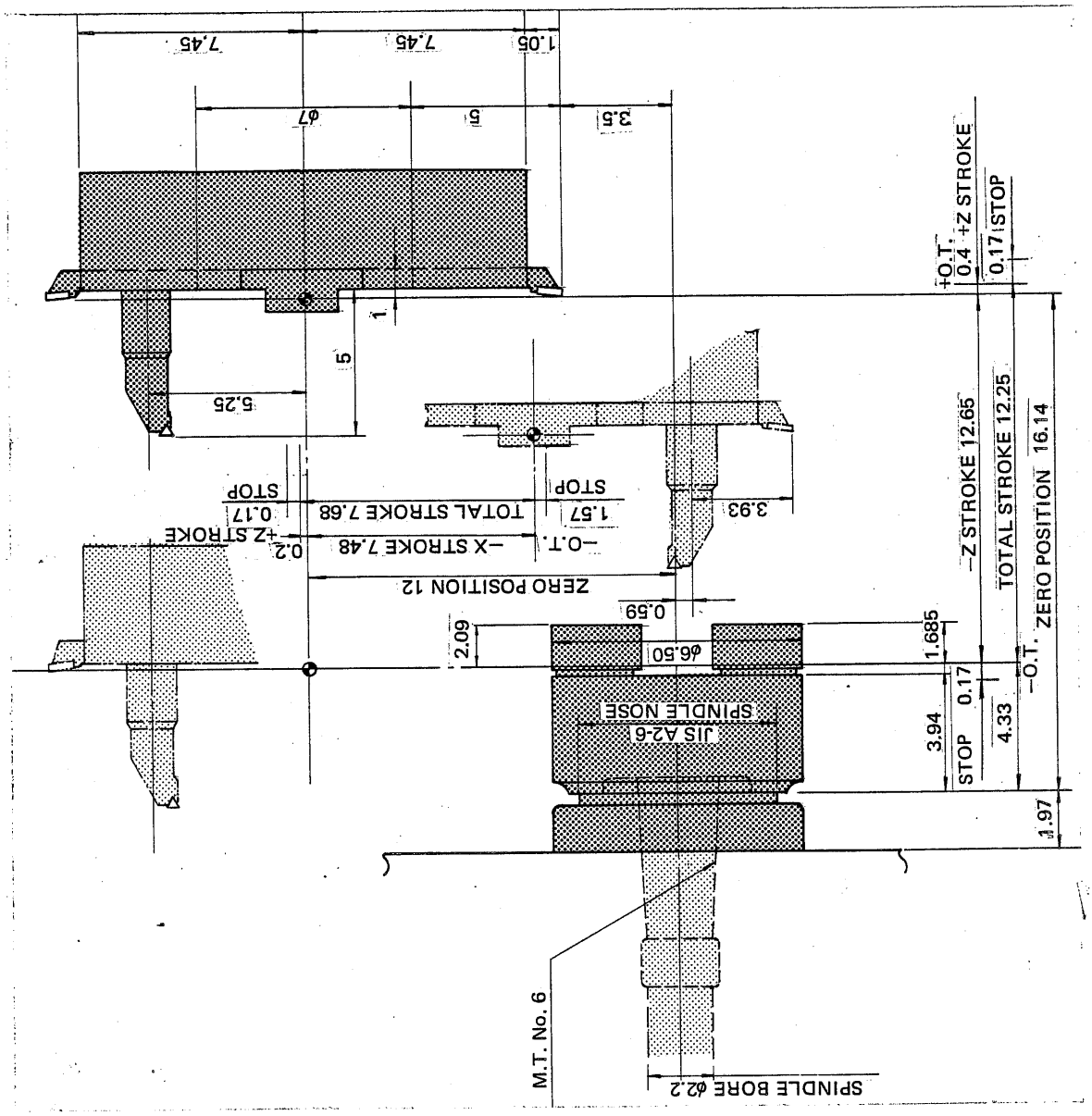

## 4-2-2 Universal type

### a) Metric system

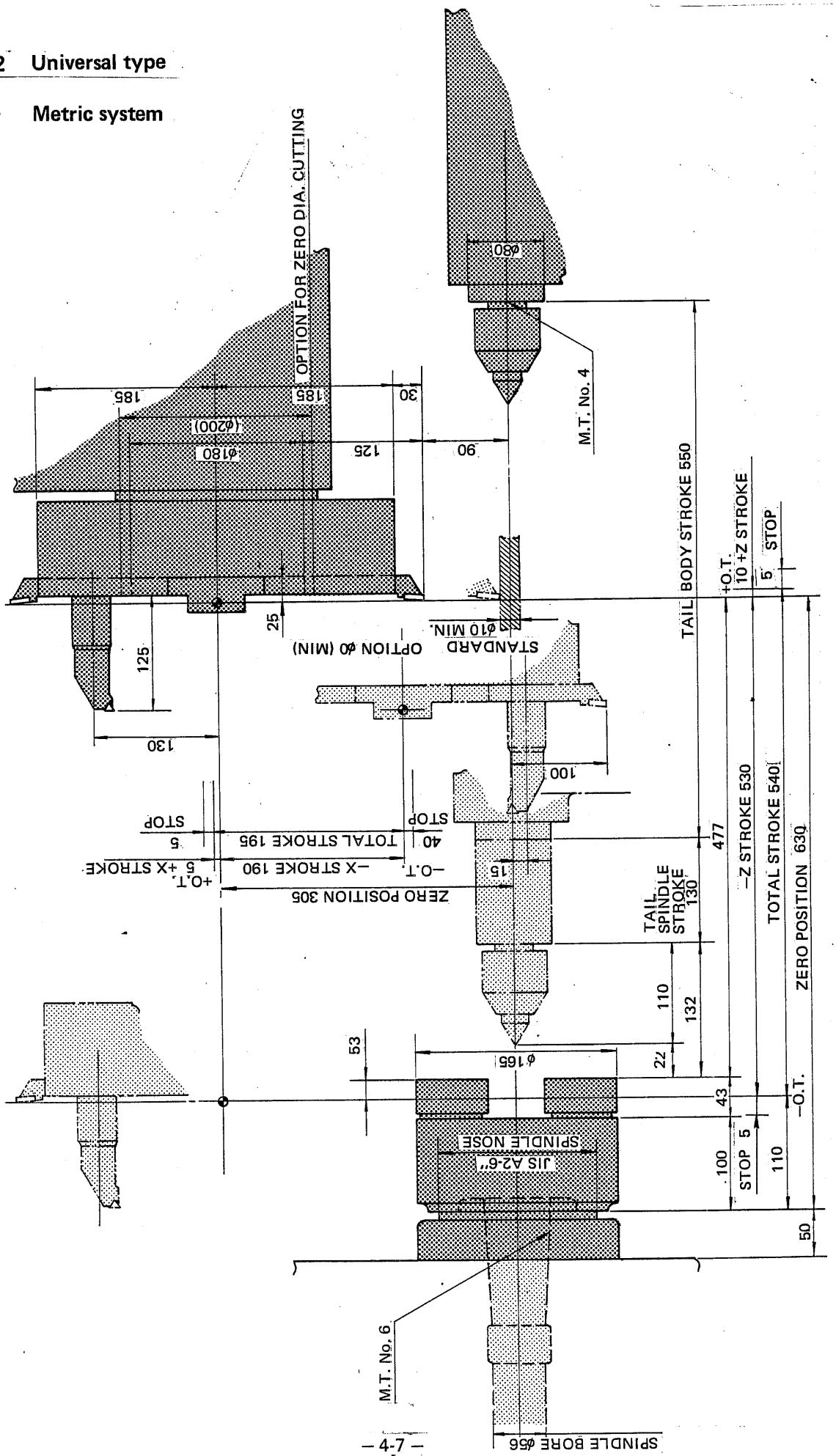

b) **Inch system**

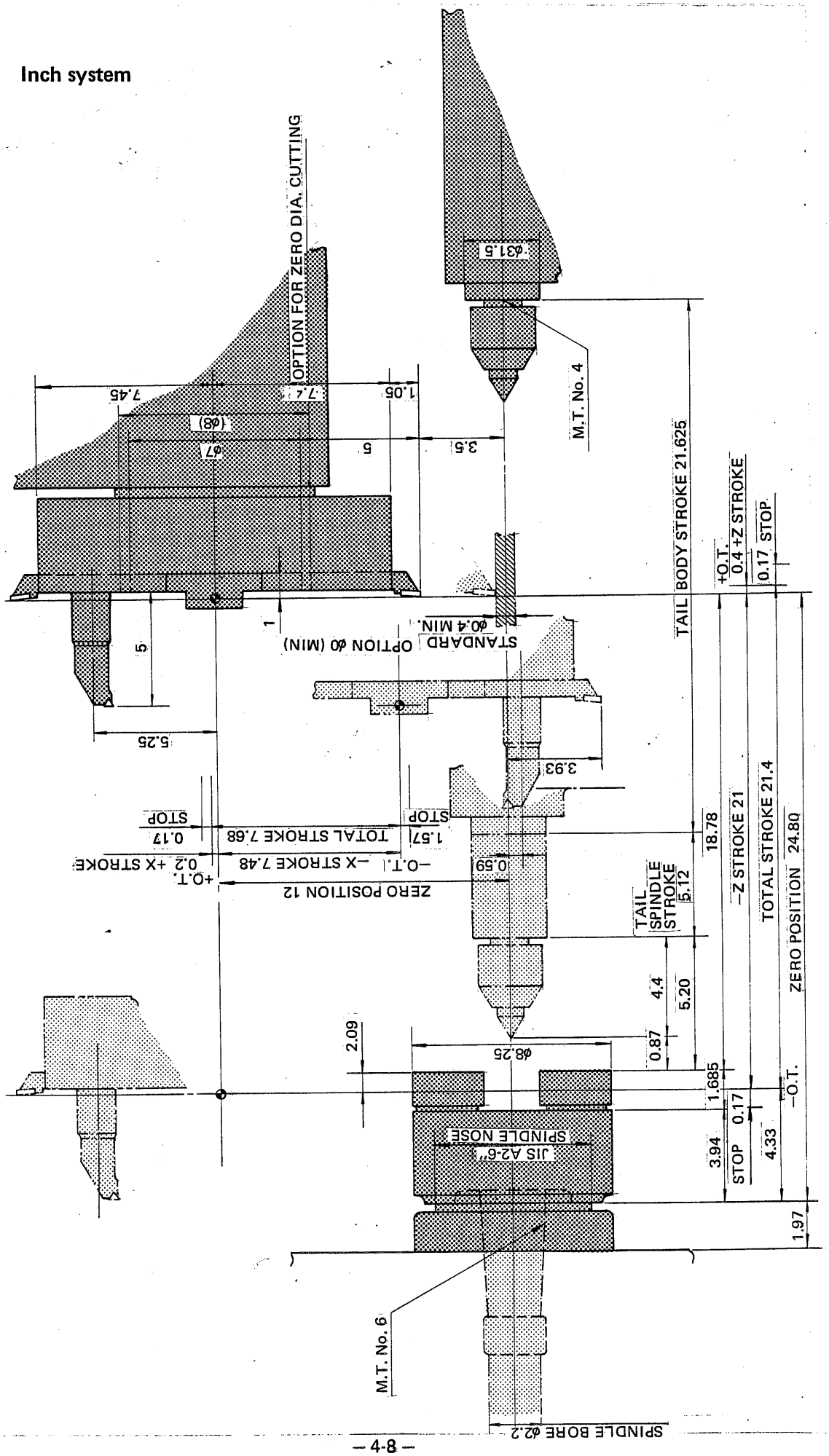

## 4-3 Square turret

### 4-3-1 Chucker type

#### a) Metric system

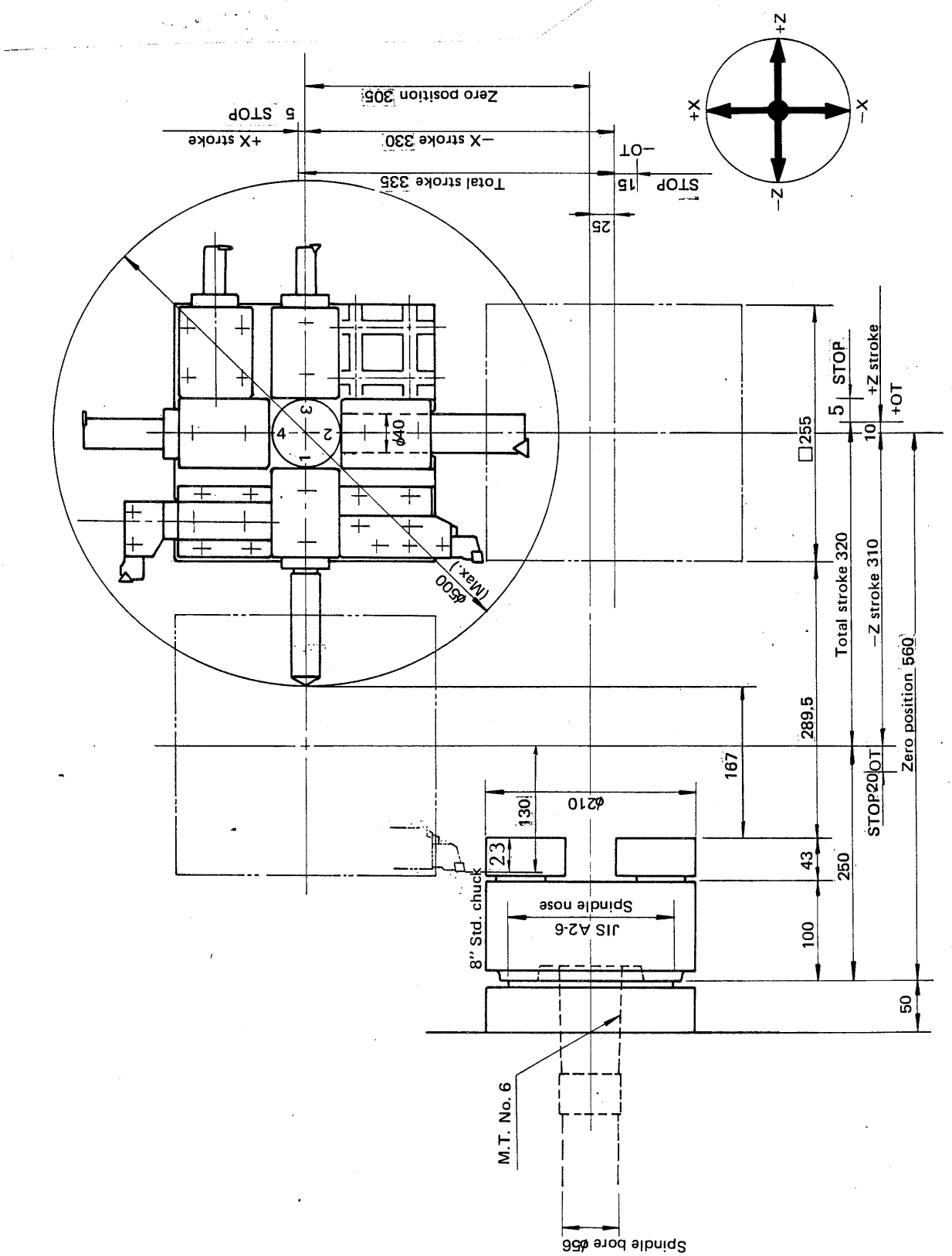

## b) Inch system

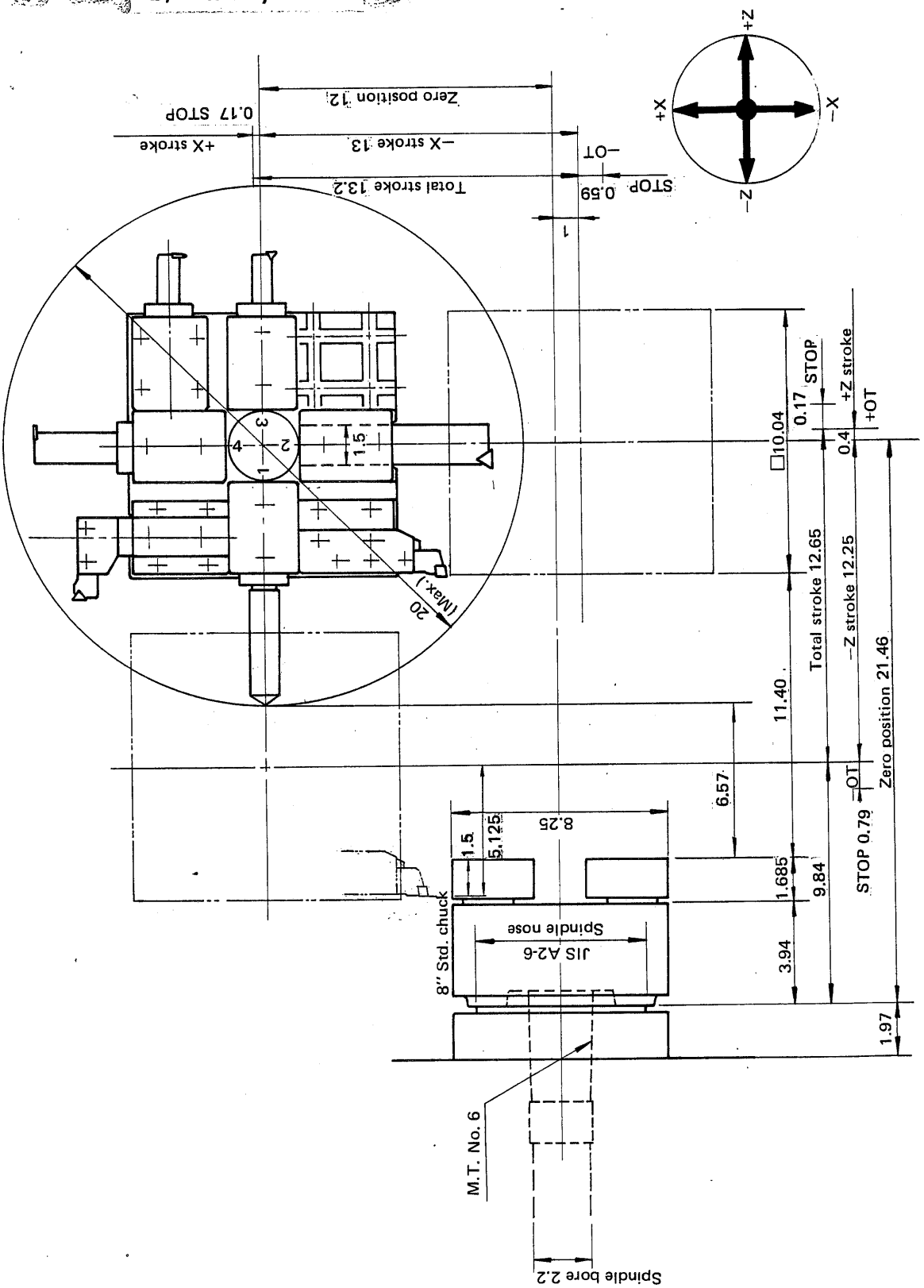

## 4-3-2 Universal type

### a) Metric system

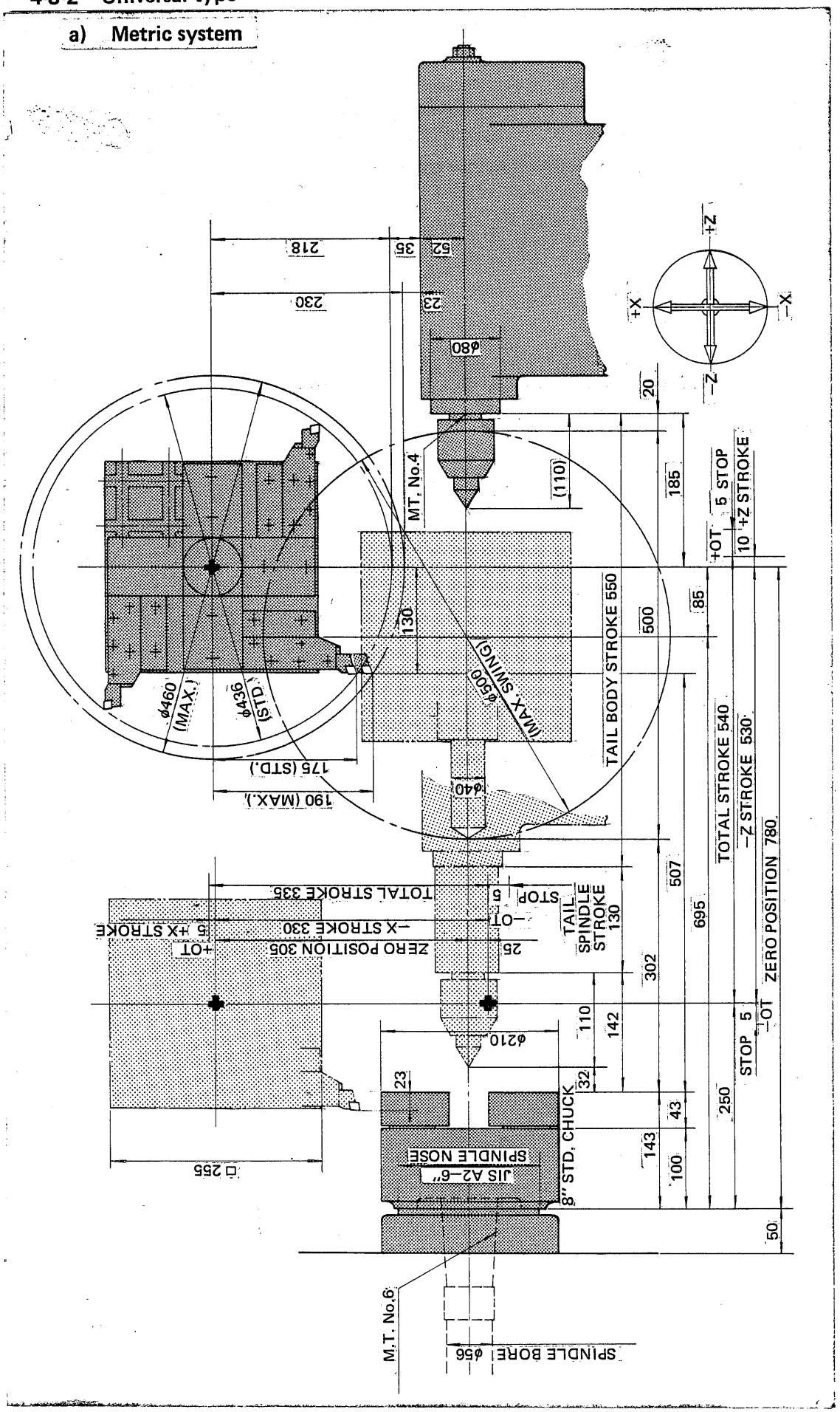

b) Inch system

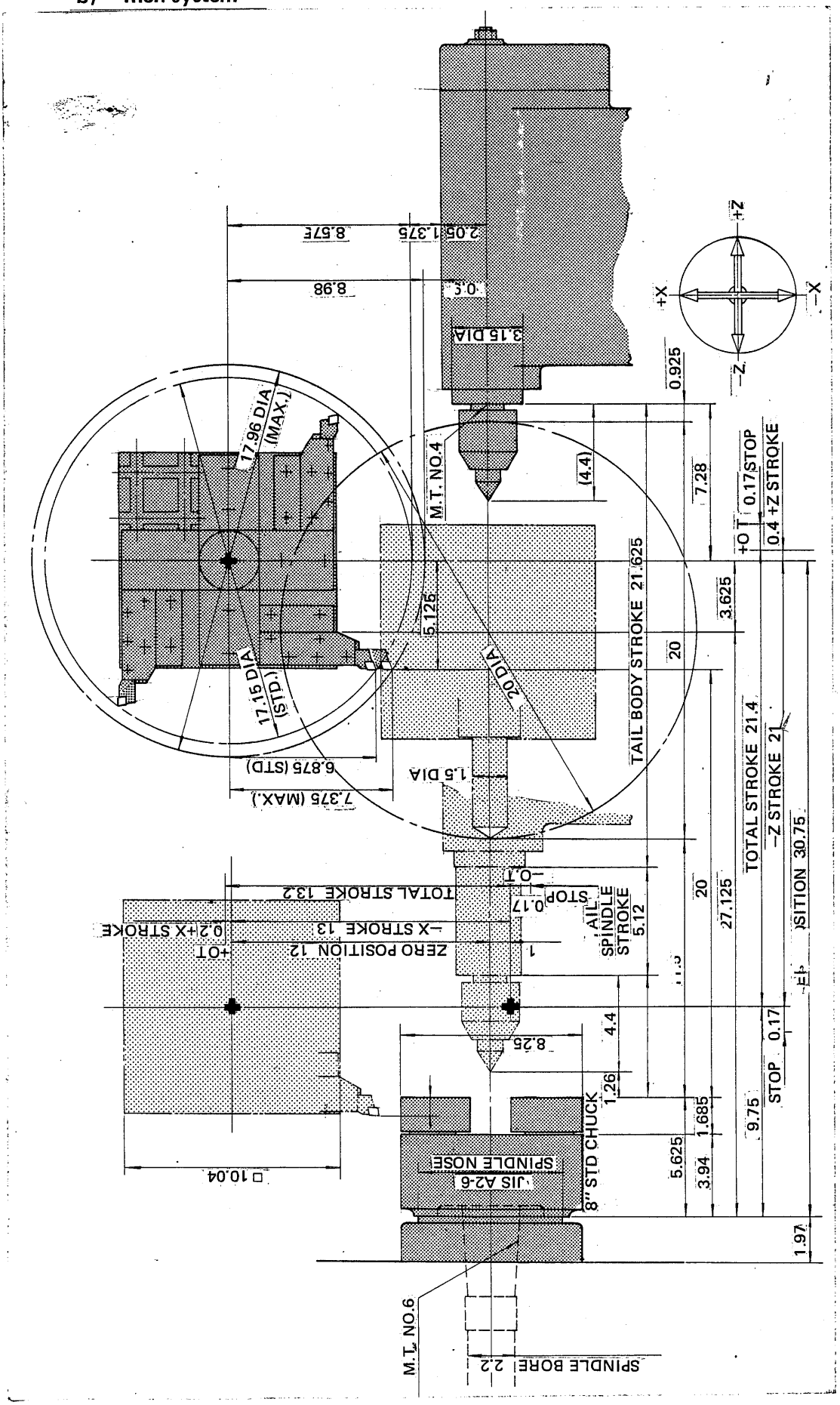

## 5. CUTTING AREA

### 5-1 Square turret

#### 5-1-1 Metric system

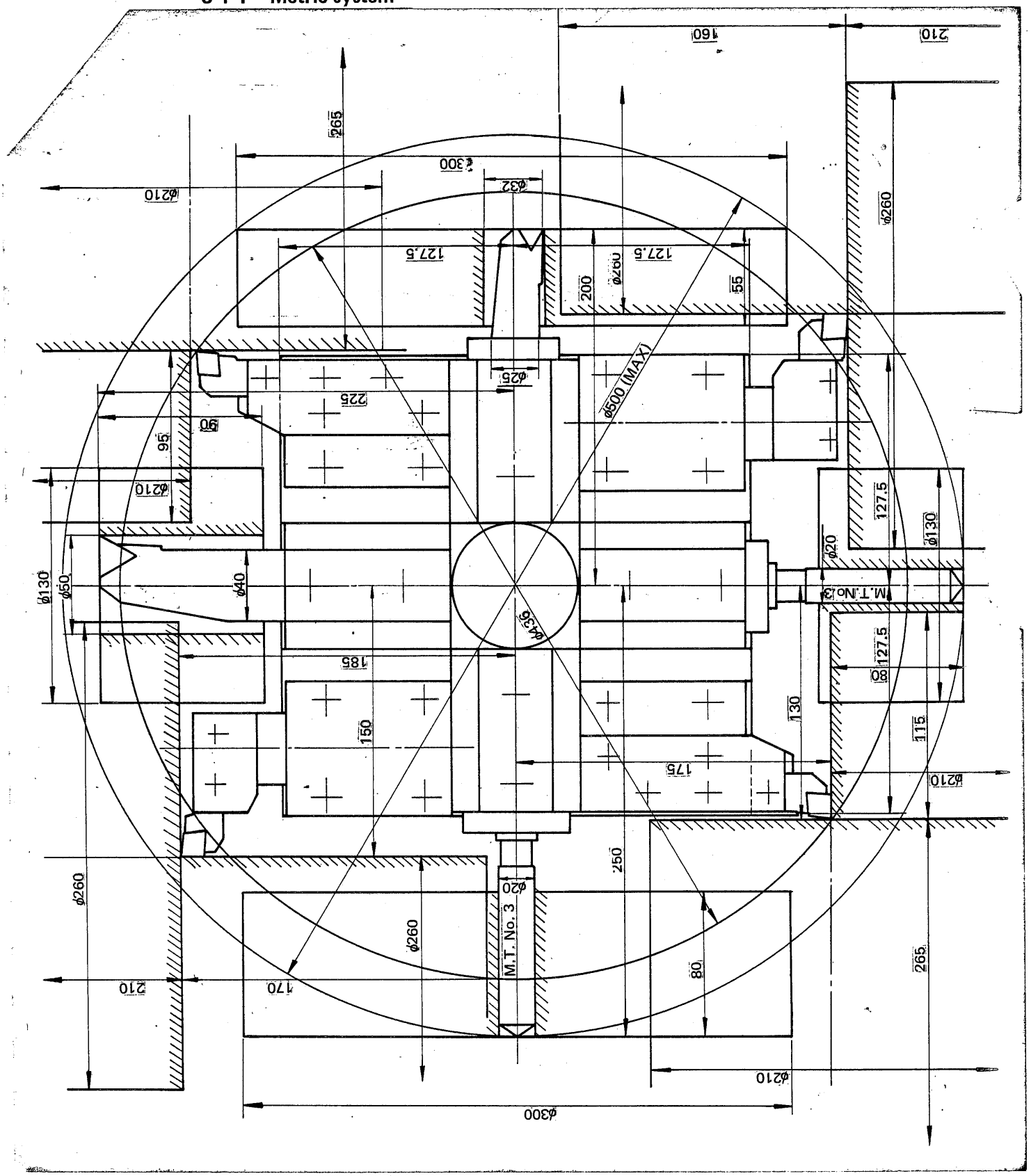

## 5-1-2 Inch system

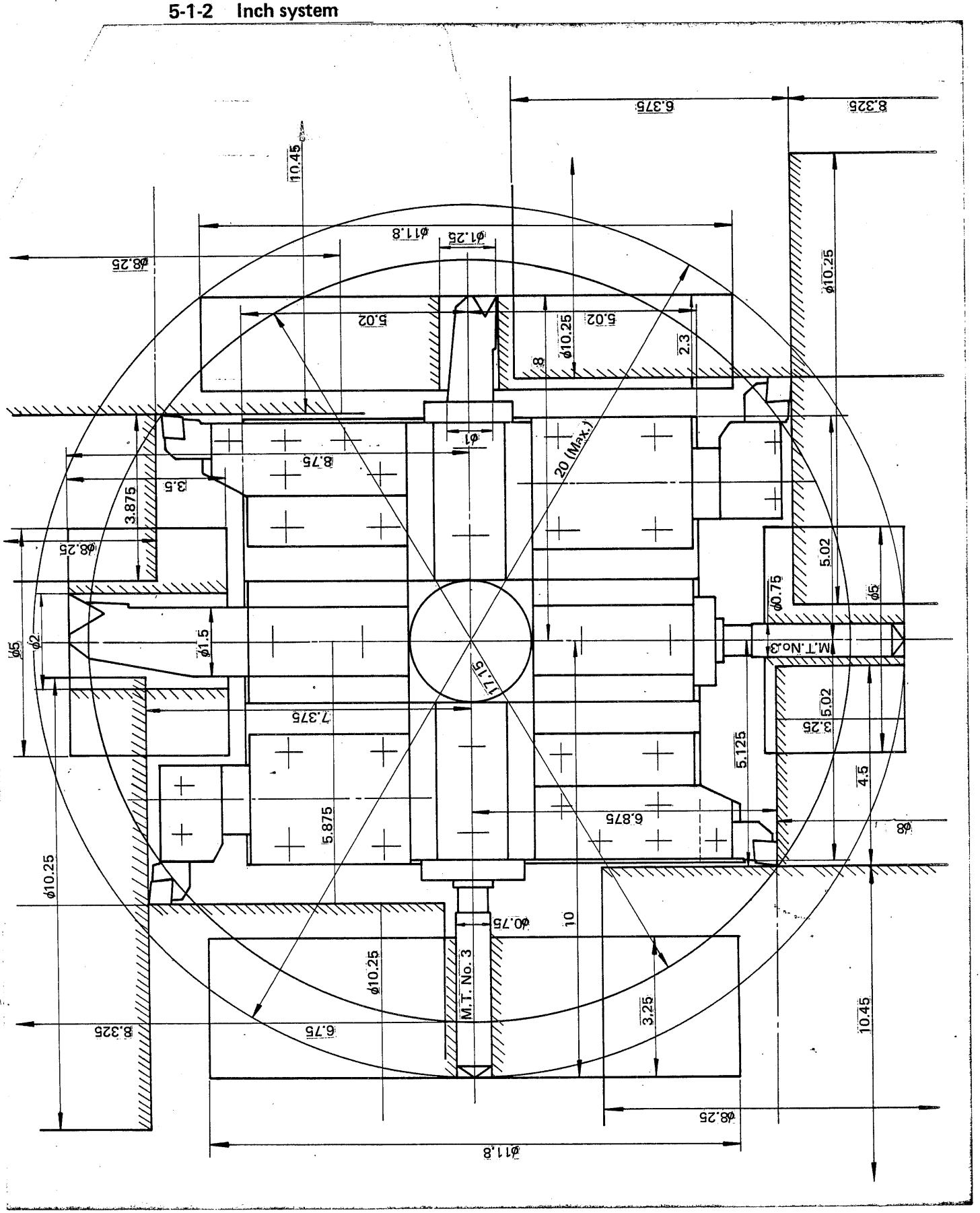

## 5-2 Octagonal drum turret

### 5-2-1 Metric system

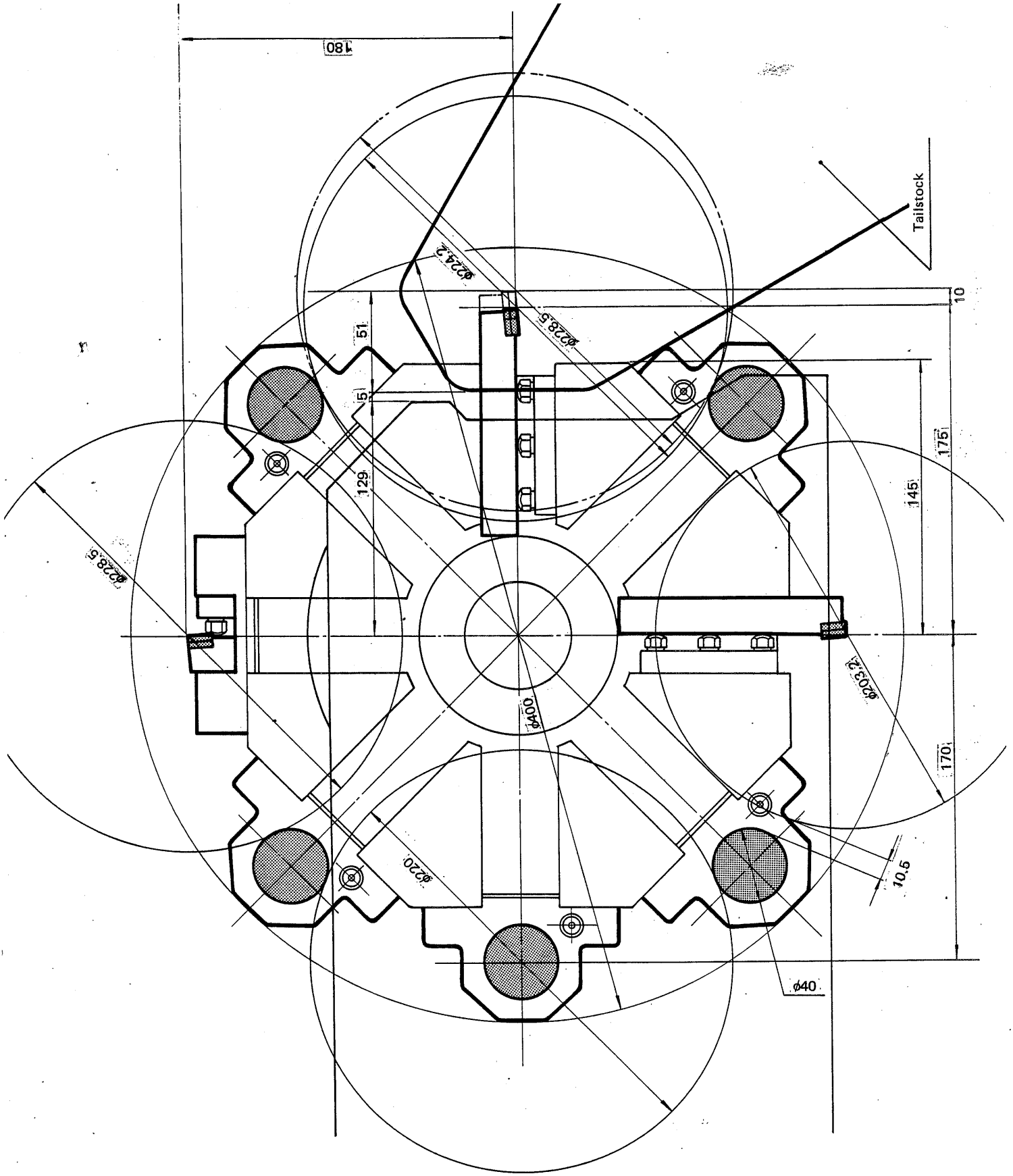

## 5-2-2 Inch system

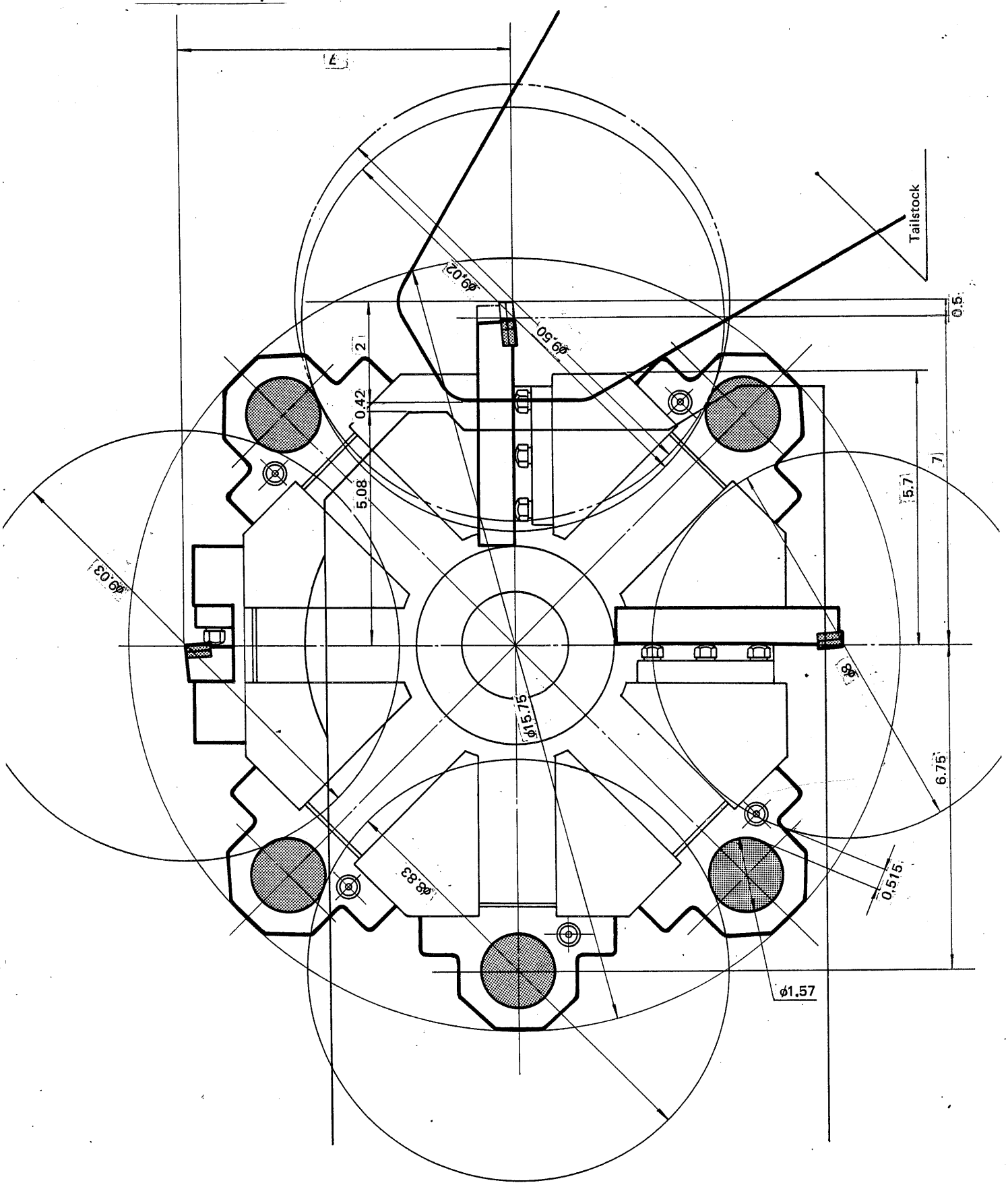

## 5-3 12-side drum turret

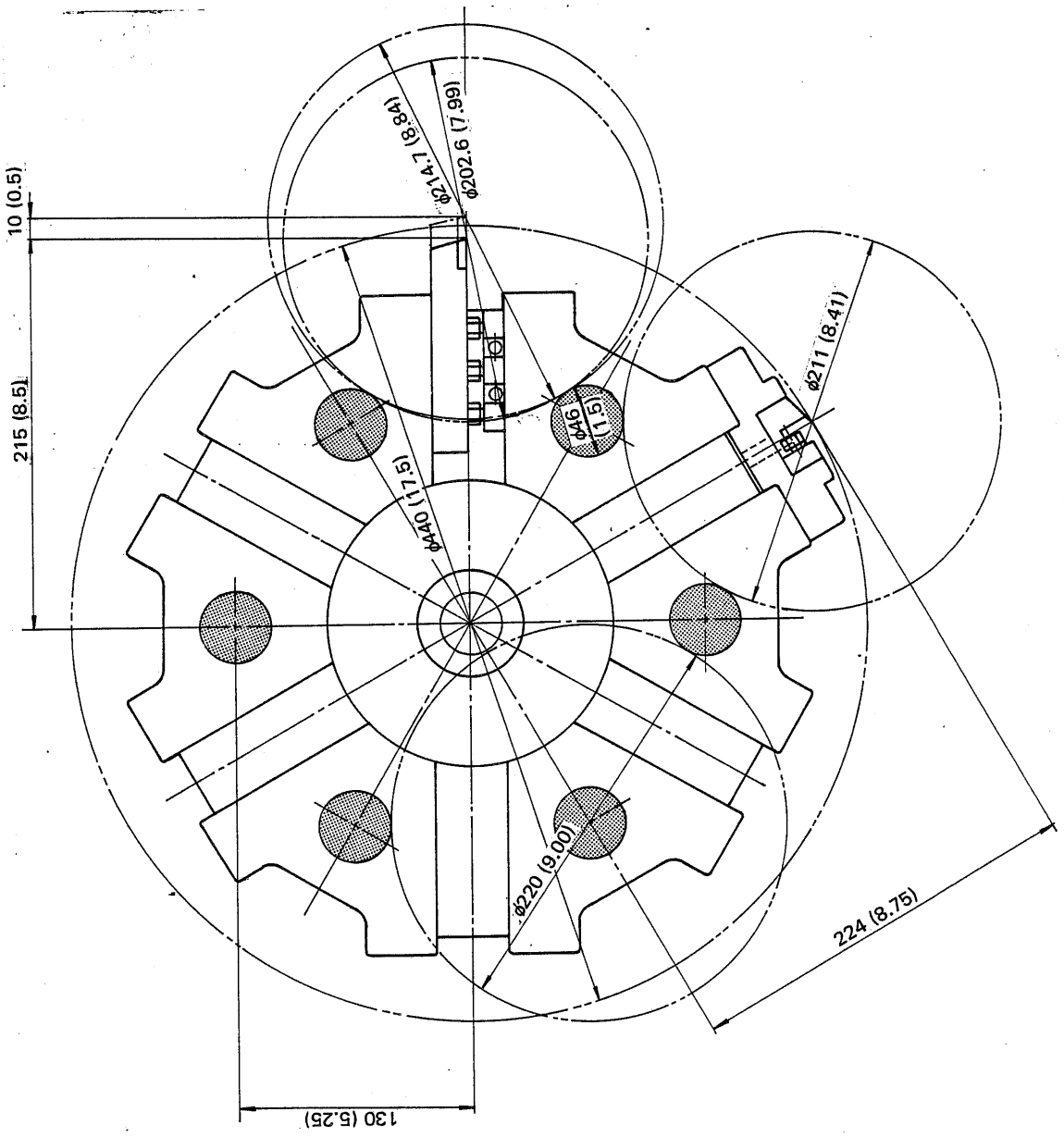

# 6 DIMENSIONAL DRAWING OF TURRET

## 6-1 Octagonal drum turret (Standard)

### 6-1-1 Metric system

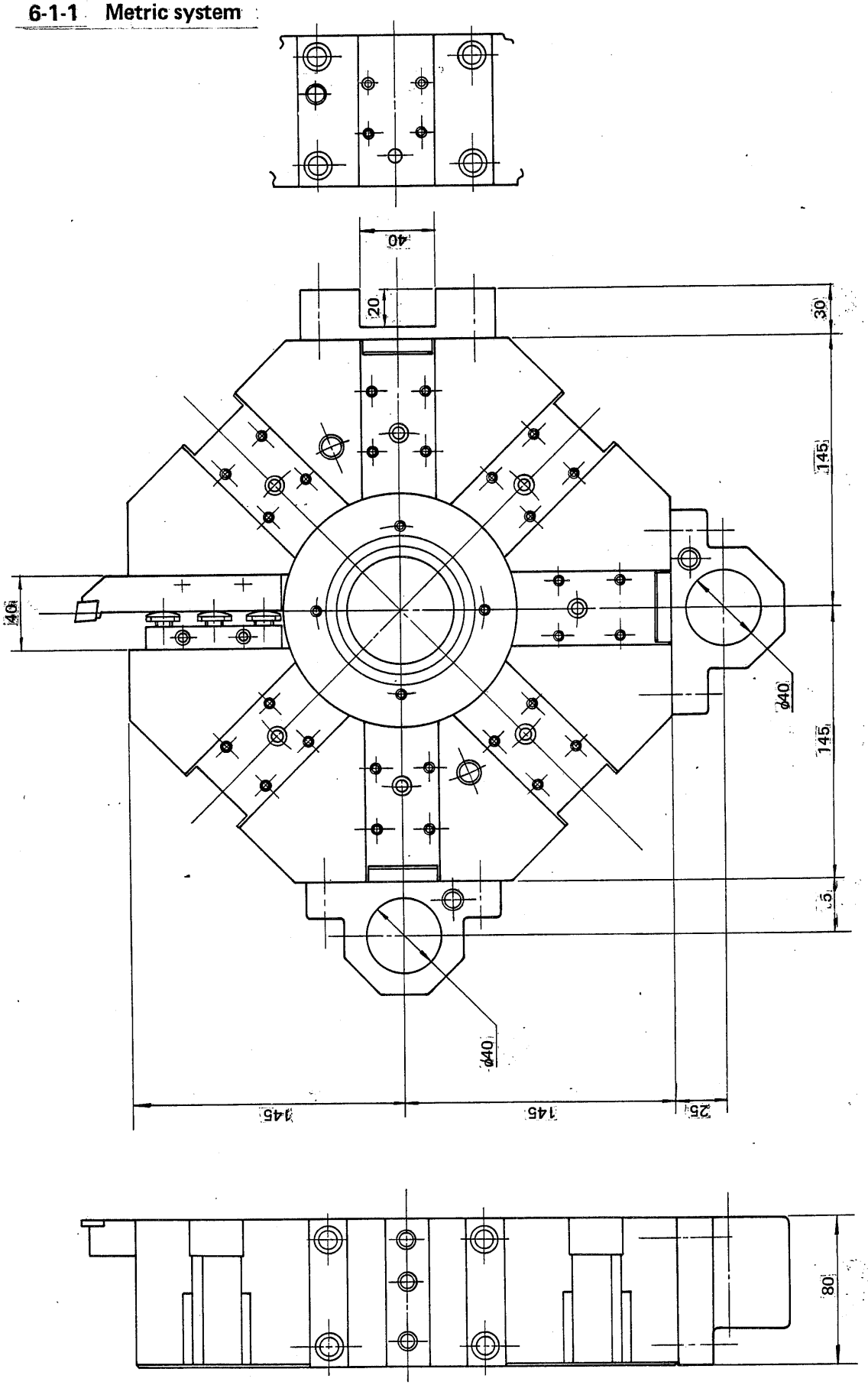

## 6-1-2 Inch system

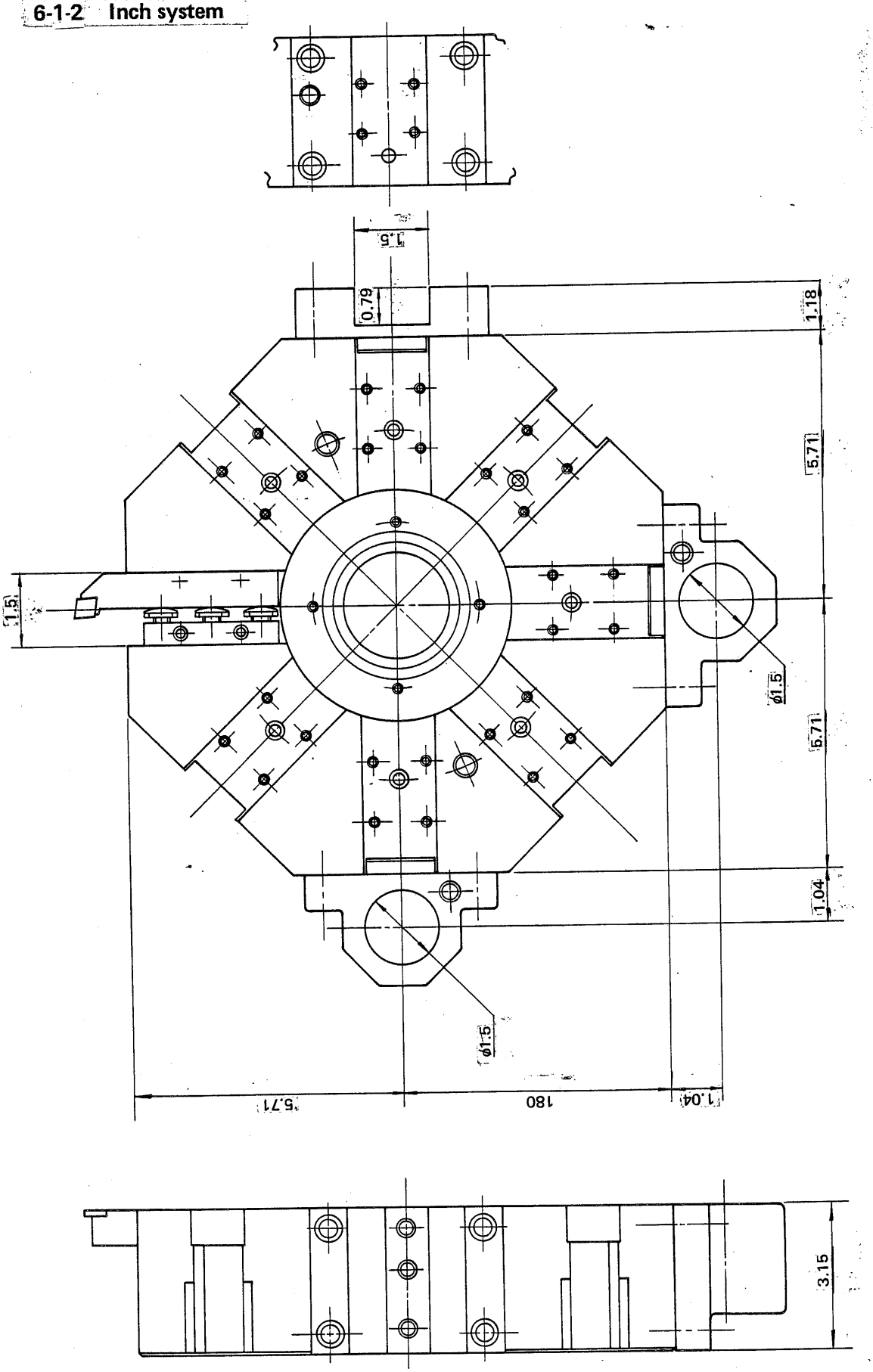

## 6-2 12-side drum turret (Option)

### 6-2-1 Metric system

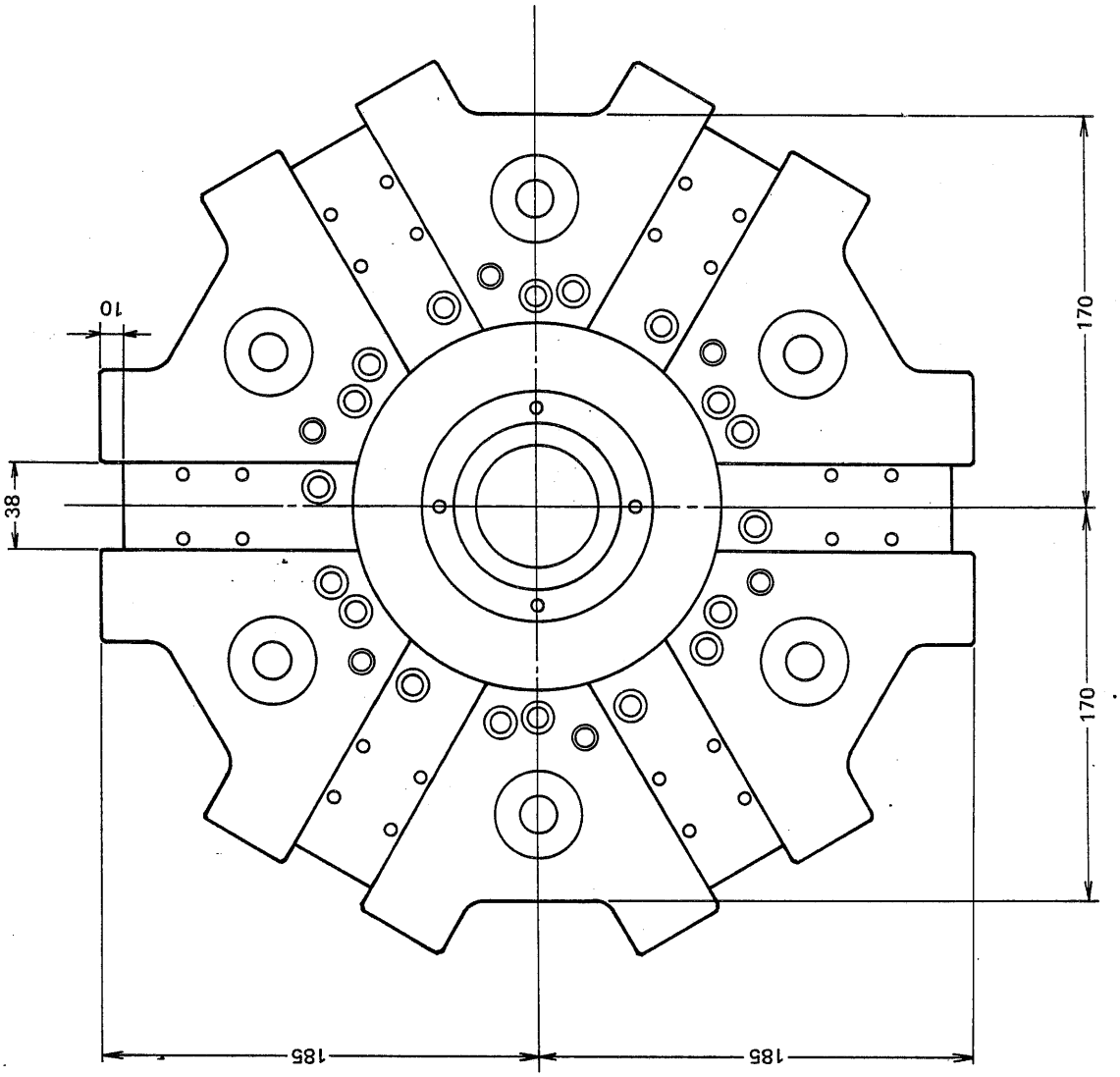


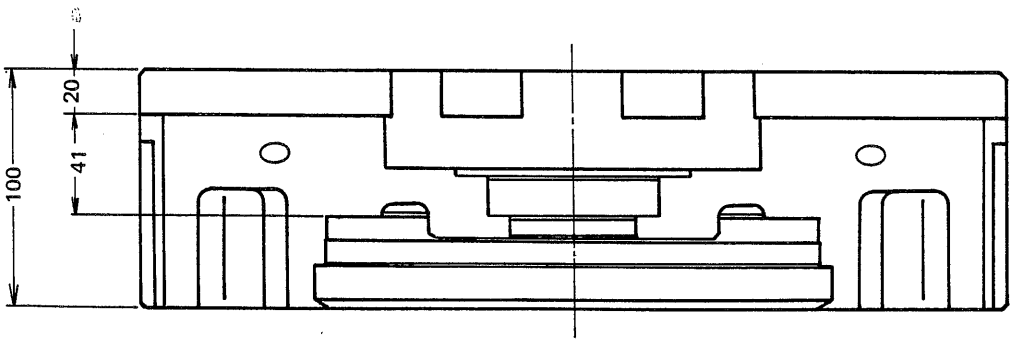

### 6-2-2 Inch system

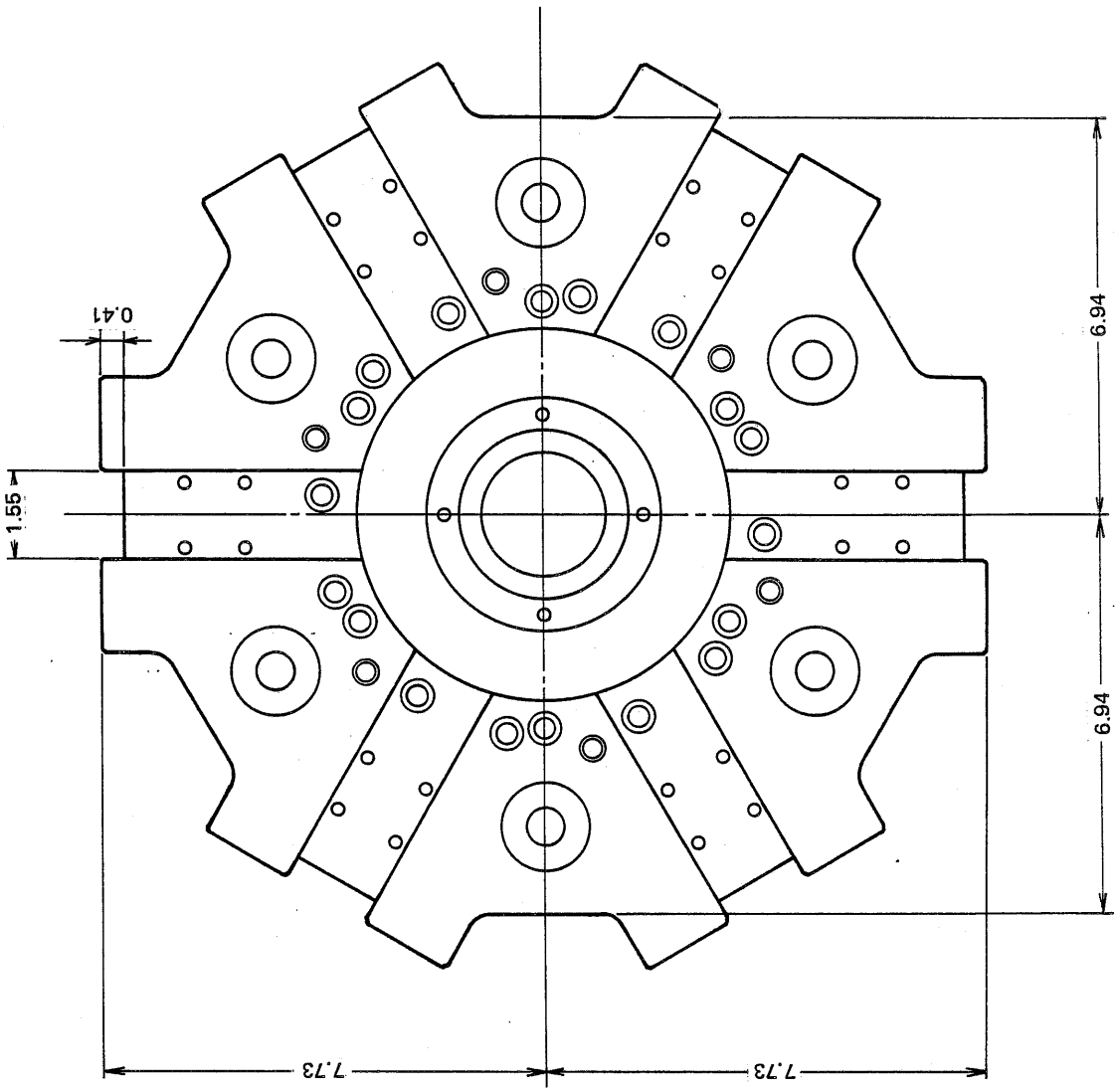


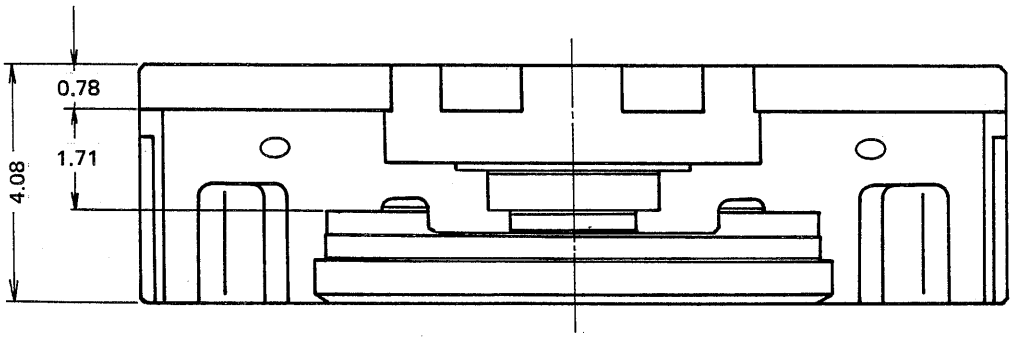

## 6-3 Square turret (Option)

### 6-3-1 Metric system

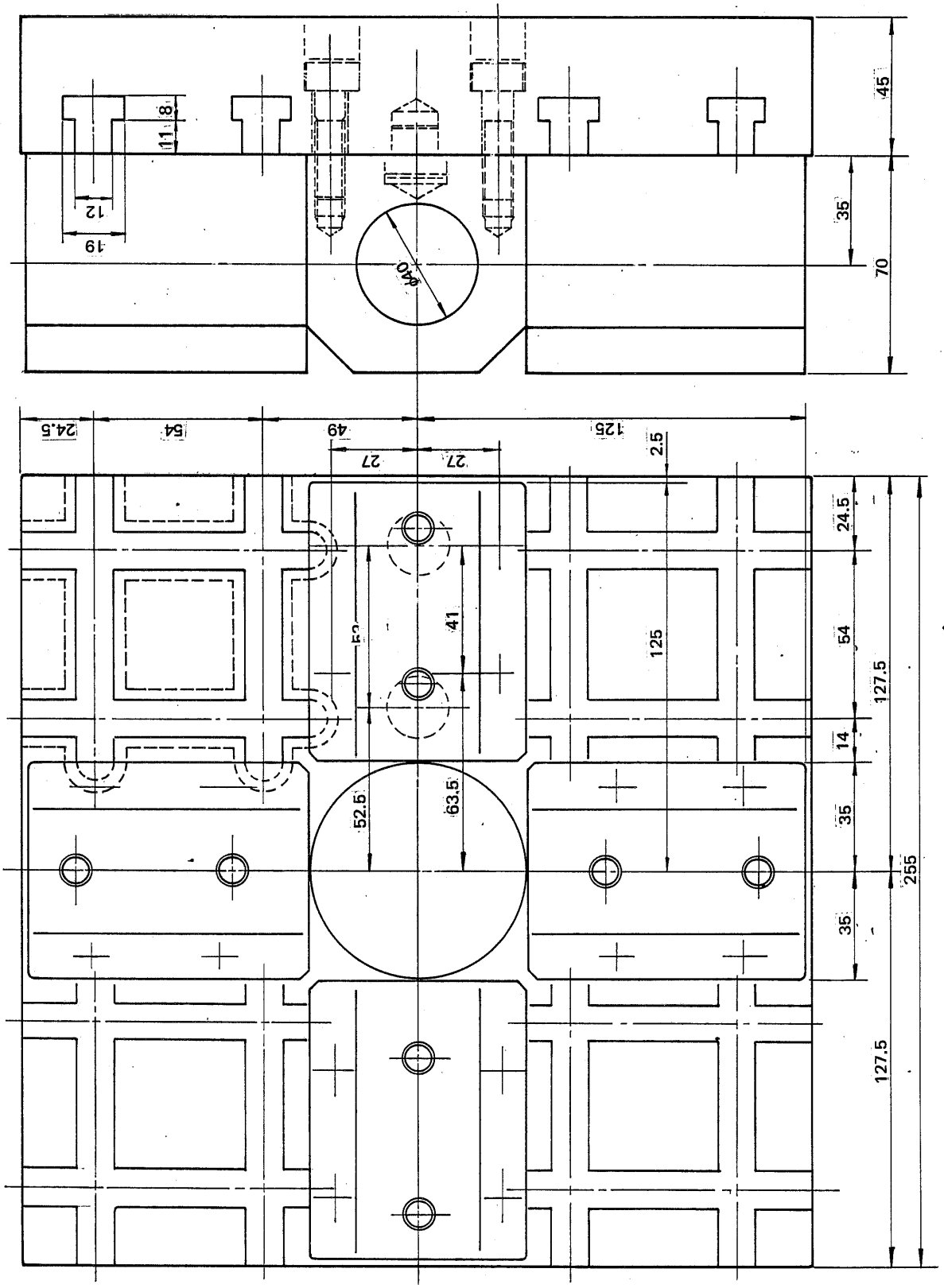

## 6-3-2. Inch system

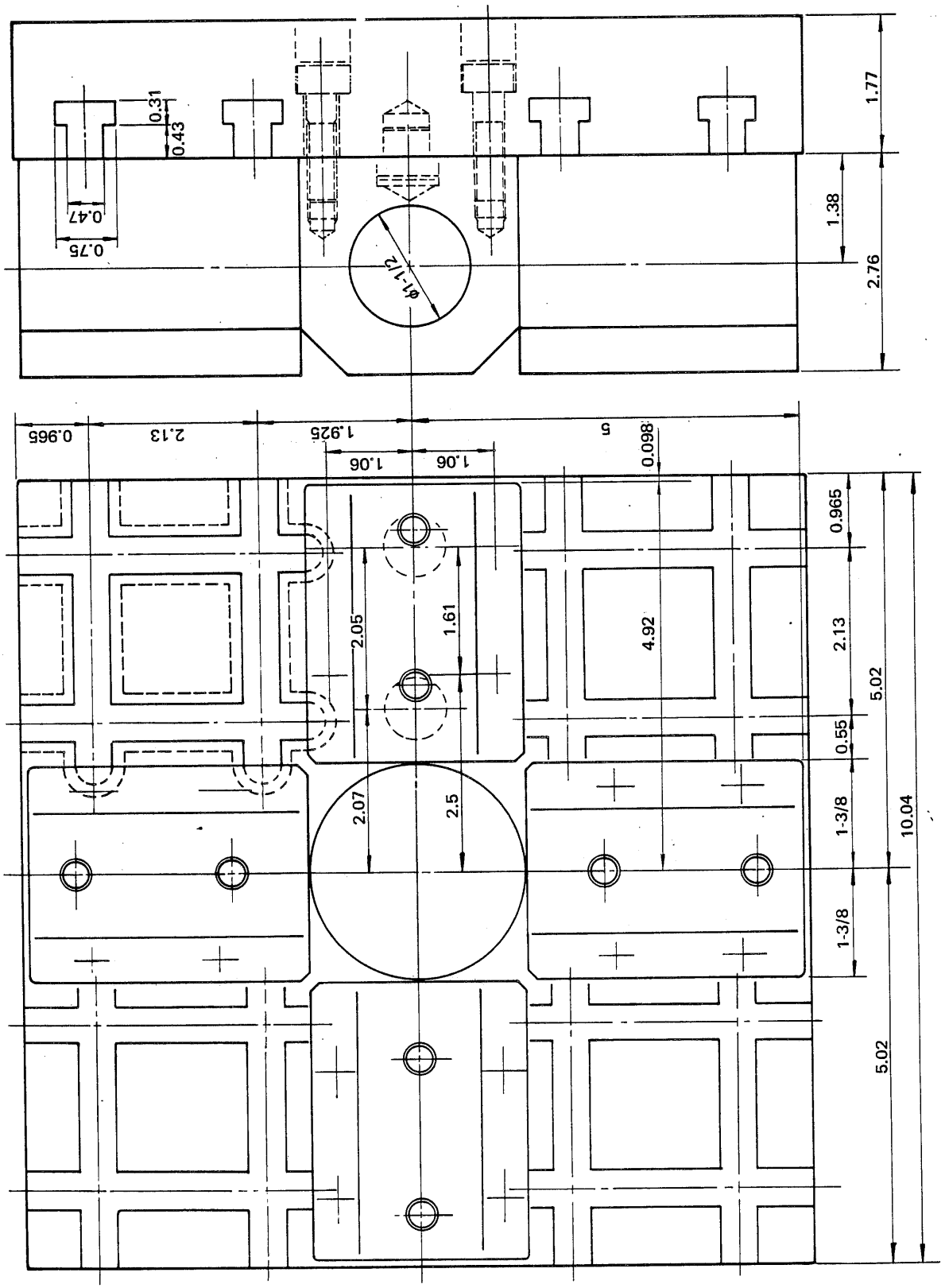

## 7. SPINDLE NOSE (JIS A2-6")

### 7-1 Metric system

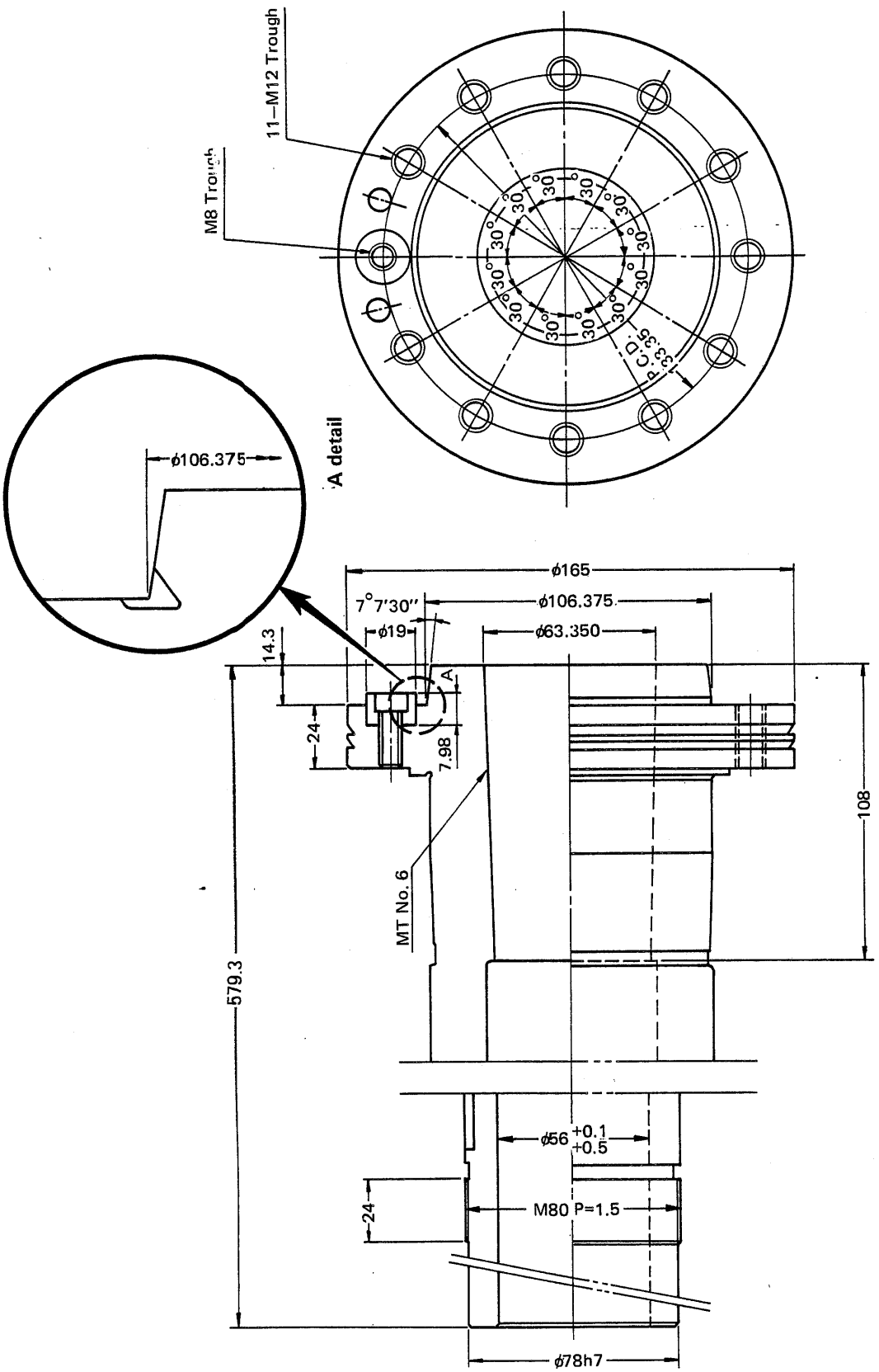

## 7-2 Inch system