Mazak

# OPERATING MANUAL

FOR

Mazak

# Quick Turn 10N

## CHUCKER & UNIVERSAL

SERIAL NUMBER: 66079

N/C EQUIPMENT: MAZATROL T-2

CONTENTS

1. VIEW OF COMPLETE SYSTEM

. With octagonal turret (standard), Universal type

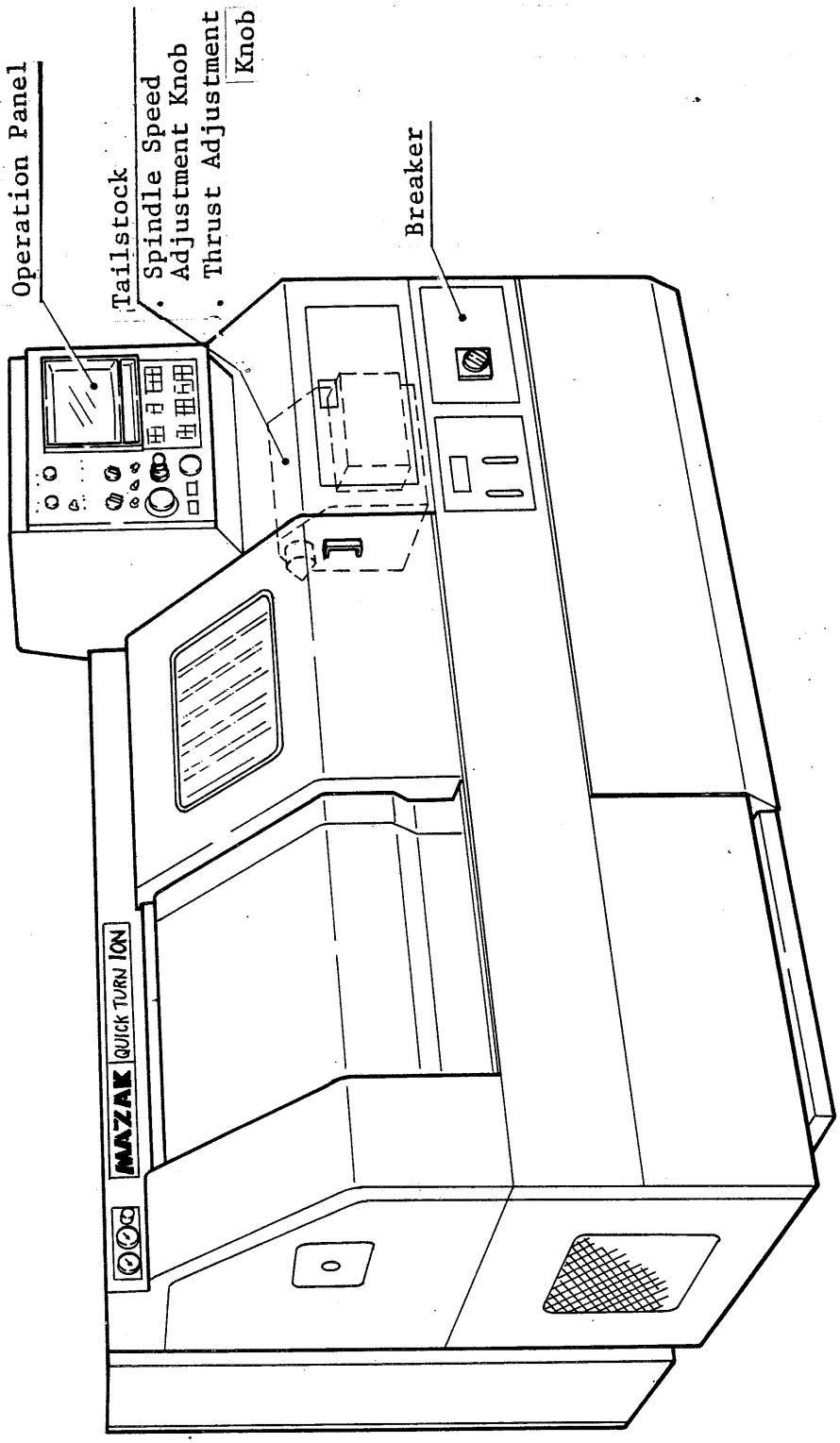

# 2. SPECIFICATION

## 2-1 Machine Specification

Machine standard specification

| ITEM | | CHUCKER | UNIVERSAL |
|---|---|---|---|
| Capacity | Max. swing | ϕ 440 | |
| | Distance between spindle tip and turrent | 110 - 420mm | 125 - 655mm |
| | Standard machining diameter | ϕ150mm | |
| | Max. machining length (*1) | - | 507mm |
| | Max. weight supported, chuck operation (*2) | 100kg | - |
| | Max. weight supported, center operation (*3) | - | 150kg |
| Spindle | Revolutions | 10 - 2600 r.p.m. | |
| | Tip shape | $A_2$ - 6" | |
| | Hollow spindle inside diameter | ϕ 56mm | |
| | Speed control system | Variable speed AC motor | |
| | Number of speeds | 1 direct rpm control (Constant peripheral speed control) | |

*1 When standard chuck and tooling are used.

*2 Chuck weight is included.

*3 Chuck weight is included.

| ITEM | | CHUCKER | UNIVERSAL |
|---|---|---|---|
| Spindle | Main motor<br><br>30 min. rating<br>Continuous rating | AC inverter motor (broad band constant output type)<br>20HP (7.5KW)<br>7.5HP (5.5KW) | |
| Turret | Type | Octagonal drum turrent | |
| | Size | 290mm | |
| | Number of tools | Up to 8 tools | |
| | Tools used | Approved tools | |
| | Tool size | 20 x 20 x 150mm | |
| | Turrent clamping force | 3500kg | |
| | High index coupling diameter | ϕ210mm | |
| | Turret change (exchange) | Possible | |
| | Turrent swing/clamp | Hydraulic pressure and electric motor | |
| Travel | X-axis travel (*4) | 155mm | |
| | Z-axis travel (*5) | 320mm | 540mm |
| Tail-stock | Type | - | Fully-automatic tailstock |
| | Travel | - | 550mm |
| | Tailstock spindle diameter | - | ϕ80mm |
| | Spindle tapered bore | - | M.T. No. 4 |
| | Spindle travel | - | 130mm |

*4 Indicates stroke between -X O.T. and +X O.T.

*5 Indicates stroke between -Z O.T. and +Z O.T.

| ITEM | | CHUCKER | UNIVERSAL |
|---|---|---|---|
| Tail-stock | Max. thrust | - | 500kg |
| | Type of center | - | M.T. No. 4 |
| Bed | Type | Horizontal | |
| | Width | 345mm | |
| Machine height | From bottom | 1720mm (Operating panel) | |
| Machine dimen-sions (W x L) | Standard machine | | 1440 x 2550mm |
| Machine total weight | Gross weight including standard equipment | 2500kg | 2800kg |
| Power | Electric power | 19.8kWA | |
| | Air | 100Nℓ /min | |
| | Air pressure | 5kg/cm$^2$ | |

The obbreviation, "Nℓ ", (normal liter) as in "100Nℓ /min" indicates the volume of air at normal atmospheric pressure compressed to about 1 kgf/cm$^2$ static pressure.

3. QT-10N/20N OPERATING PANEL

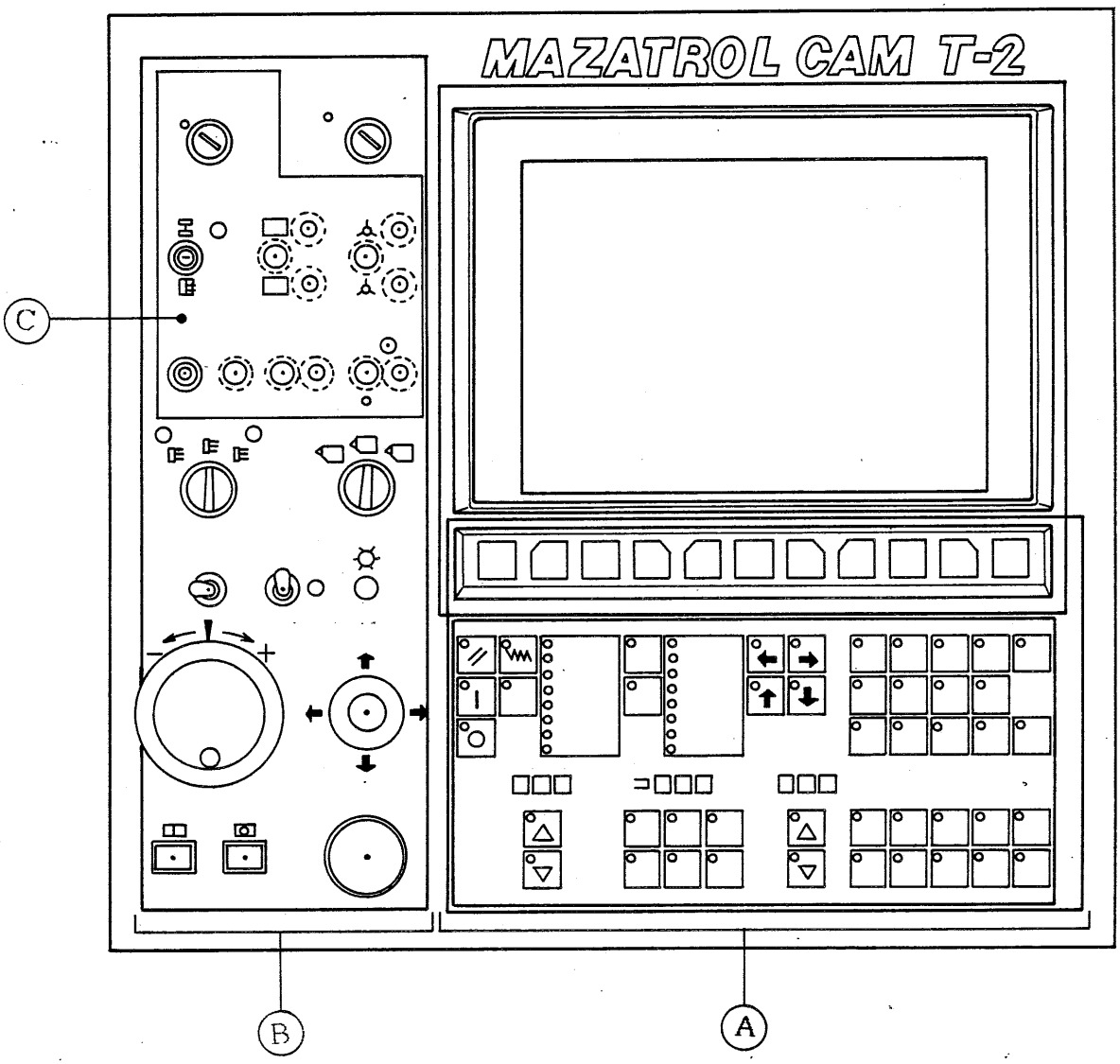


(Outline) The switches on this operating panel are arranged in two sections: Section Ⓐ, used interactively for program preparation, data input, etc., and; Section Ⓑ used for the manual control of the machine.

Section Ⓐ: CRT menus, input data and machine operating conditions.

Section Ⓑ: Manual control of the machine.

Note: Switch Section Ⓒ is optional. Although these switches may be installed, they will be inoperative unless this section has been ordered.

| Designation | | Use |
|---|---|---|
| DOOR INTERLOCK<br>DISABLE ENABLE | Door Interlock (Optional) | . When the front door is open, the machine will not operate either in the locked (ENABLE) or not locked (DISABLE) condition.<br>. The key can be removed only when it is in the ENABLE position.<br>(Note) The key can not be removed when in the DISABLE position, and any attempt to remove the key by force will damage it. |
| PROGRAM<br>LOCK ENABLE | Data Lock | . Insert the key and turn it to the LOCK position to prevent data from being re-written.<br>. The key can be removed only when it is in the LOCK position.<br>(Note) It can not be removed in the ENABLE position and may be damaged if an attempt is made to remove it by force. |
| | Bar Feeder On/ Off (optional) | . BAR FEEDER MODE available (when lamp is on)<br>. BAR FEEDER MODE not available |
| | Front Door Open/Close (Optional) | . This switch openes the front door; the lamp lights when the door is opened.<br>. This switch closes the front door; lamp lights when the door is closed.<br>. This applies only in the manual mode. |
| | Chuck Open/ Close (Optional) | . This swith unchucks a workpiece.<br>. This switch chucks a workpiece. |

| Designation | | Use |
|---|---|---|
| | Parts Catcher Forwards/ Backwards (Optional) | • This switch moves the parts catcher forwards.<br>• This switch moves the parts catcher backwards.<br>• This function applies in the manual operation mode only. |
| | Air Blow (Optional) | • This switch is used for the air blow execution.<br>• This function applies in the manual operation mode only. |
| | Spindle Orient (Optional) | • This switch orients the spindle. After it is oriented, the lamp will come on.<br>• This function applies in the manual operation mode only. |
| | Automatic Power Shut-off On/Off (Optional) | • I Automatic power shut-off is on when the lamp is on.<br>• O Automatic power shut-off is off when the lamp is out. |
| | Tail Spindle Forwards/Stop/ Backwards | • This switch moves the tail spindle forwards. While the tail spindle is moving, the lamp will blink. The lamp will be steady when the spindle is at the forward end.<br>• This switch stops the tail spindle.<br>• This switch moves the tail spindle backwards. While the spindle is moving, the lamp will blink. When the spindle is fully back, the lamp will be steady. |

| Designation | | Use |
|---|---|---|
| | Tail Body Forwards/Stop/ Backwards | . This switch moves the tail body forwards.<br>. This switch stops the tail body.<br>. This switch moves the tail body backwards.<br>. This feature applies in the manual operation mode only. |
| X Z | Axis Select X/Z | . This switch determines the X- or Z-axis feed direction as pulses are being fed from the manual pulse generator. |
| | Handle Interrupt On/Off | . This switch allows the manual pulse generator step distance (per pulse) to be adjusted during automatic operation.<br>Note 1. Use parameters (HS) to set the handle interrupt clamp value.<br>2. Use parameter (P12) to set the per-pulse interval.<br>3. To reset the interval press the NC RESET button, with the handle interrupt button On. |
| | Tool Swing | . This switch swings a tool in the spindle mode. |
| − + | Manual Pulse Generator | . This function applies in the manual mode, with the handle interrupt switch On. Turn the pulse generator handle manually to inch the machine. |

| Designation | | Use |
|---|---|---|
| 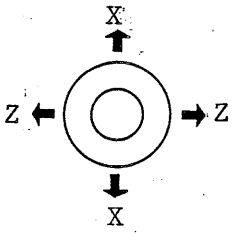 | Mono Lever | . The mono lever switch controls the slow feed, rapid feed and zero point return modes.<br>The mono lever switch handle should be towards the operator. Then pushing it to the right or left (+X, -X, +Z or -Z), will cause the turret to be continuously moved in the corresponding direction. |
| 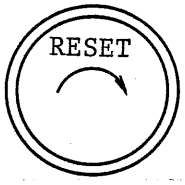 | Emergency Stop Button | . This button stops the machine in an emergency condition.<br><br>Note: After resetting the emergency stop always return to the dog zero point. |
| 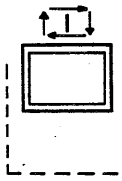 | Cycle Start | . This switch is used to start or re-start the machine in the automatic operation mode. |
| 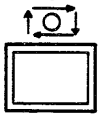 | Forward Feed Stop | . This switch interrupts the operation of the machine in the automatic operation mode, stops decelerating a moving axis, terminates dwell in the dwell mode and momentarily interrupts the machine operation while the M,S,T, or G command is being executed. |

# 4. TURRET

o With octagonal turret (standard)

The turret of the machine is of disk type turret accommodating up to eight tools. The tool numbers are given in two-digit and assigned as below.

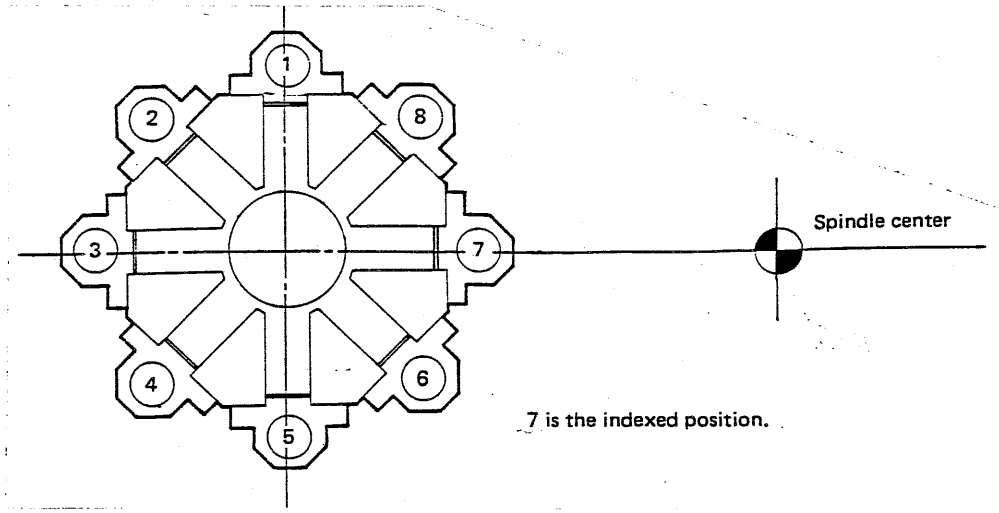


o With quadrangular turret (option)

The turret of the machine is of square type multi turret accommodating up to eight tolls. The tool numbers are given in two-digit and assigned as below:

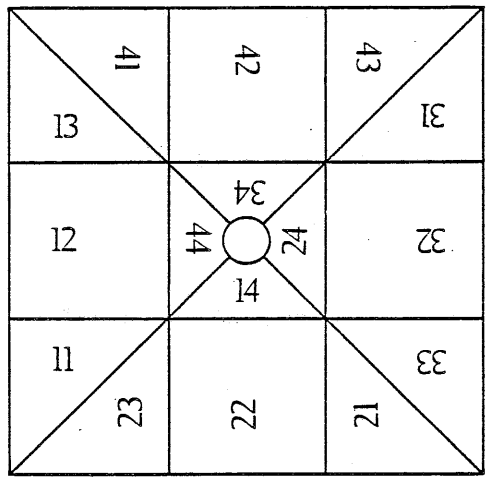


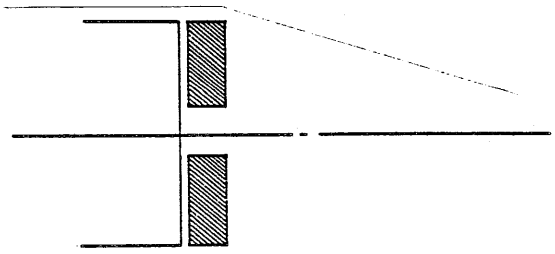

This indicates turret index position when 11, 12, 13 or 14 command is provided.

Tool number command

11.12.13.14

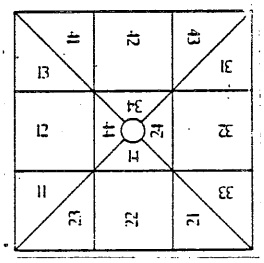


21.22.23.24

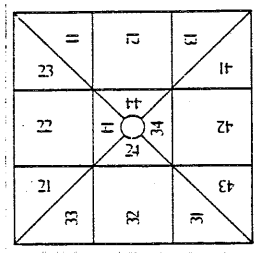


31.32.33.34

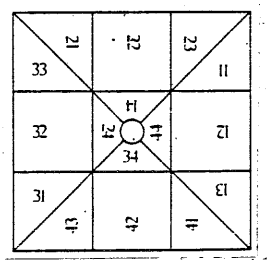


41.42.43.44

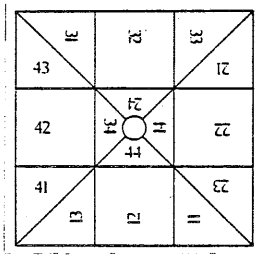


o With twelve-angle turret (option)

The turret of the machine is of drum type turret accommodating up to twelve tools. The tool numbers are given in two-digit and assigned as below:

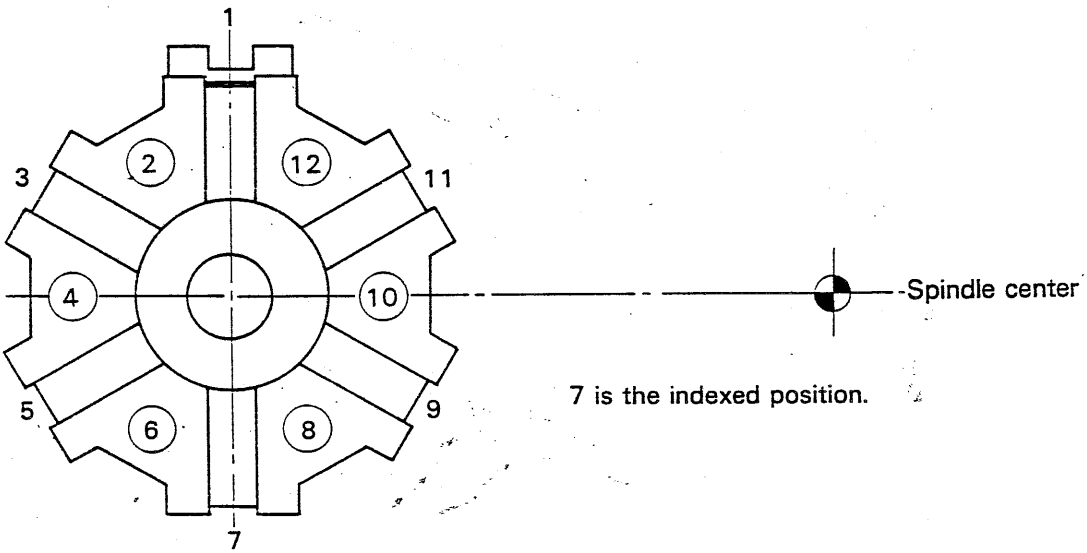


Note: Never use the boring bar holder for octagonal turret. (Because of the interference with cover)

5. CHUCKING PRESSURE REGULATING VALVE

Chuck Clamping force can be adjusted by this valve.

Maximum pressure for the standard chuck, H01MA8", is 35kg/cm$^2$. For other chucks, refer to the specifications provided on the legend plate.

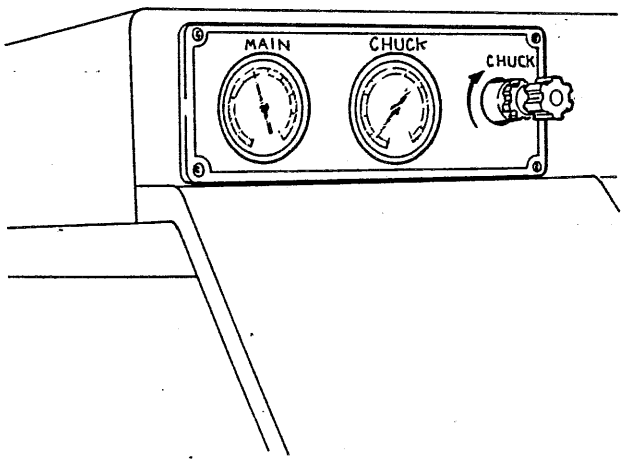

6. NEVER PLACE SERVICE TOOLS OR OTHER OBJECTS ON CEILING COVER WINDOW

If a service tool on the window (indicated by an arrow mark) shown below cutting area cannot be lighted satisfactorily or it causes the window to be deflected.

## 7. PRECAUTION WHEN USING THE TAILSTOCK SPINDLE

7-1 Pay strict attention to the following two instructions when mounting a workpiece using the tailstock spindle switch.

(Adjustment)

1. To use a machining program, put the tailstock spindle switch in the "advance" position.

2. Adjust the tailstock spindle dog as follows:

(i) Retract

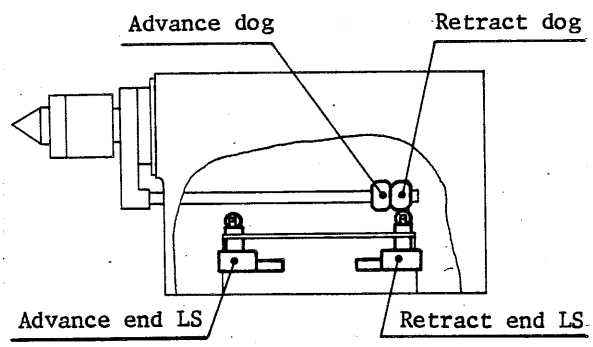


Set the retract dog so that the retract end LS comes "ON" when the dog on the retracting tailstock spindle reaches the end of the cylinder stroke.

(Because of the design of the present machine, it is best to position the advance and retract dogs so that they touch each other as shown in the figure on the left.)

(ii) Advance

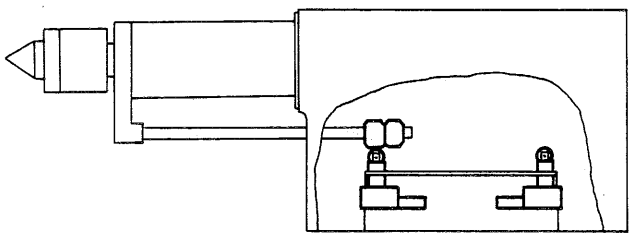

Position the advance dog so that the advance end LS comes "ON" when this dog reaches the cylinder advance end.

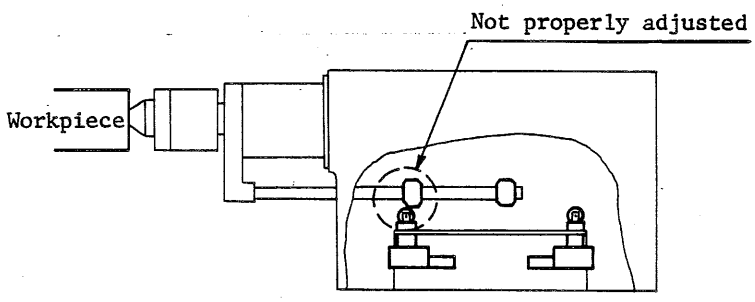


* Adjust the dog position so that the dog almost touches the LS.

7-2 The above adjustment procedure 7-1, however, does not apply to machines which are provided with automated accessories such as robots, loaders, temporary cradles, etc., and which do not require the operator to position the workpiece. The dogs on these machines are positioned as follows:

(Adjustment)

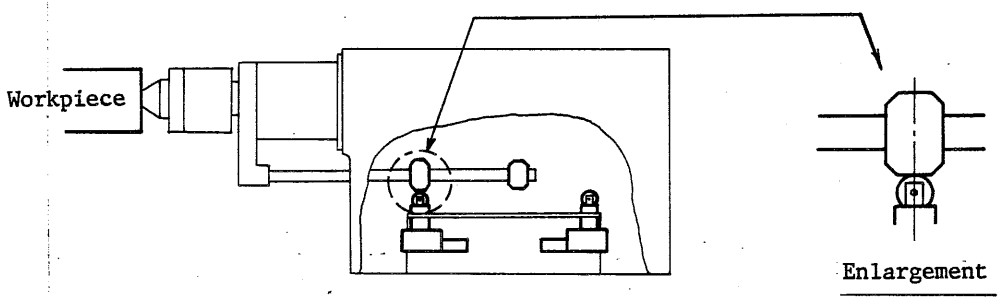


(i) Position the workpiece using the tailstock spindle advance switch.

(ii) Leave the switch in the advance position.

(iii) Adjust the advance dog position so that the advance end LS comes "ON" when the center of the dog reaches the LS.

* The tailstock spindle switch should remain in the "Stop" position when machining using the automatic functions.

## 8. SPINDLE SPEED-POWER DIAGRAM

Spindle speed 3600 rpm

Power 10 HP (30 Min. Rating) Broad band constant output type

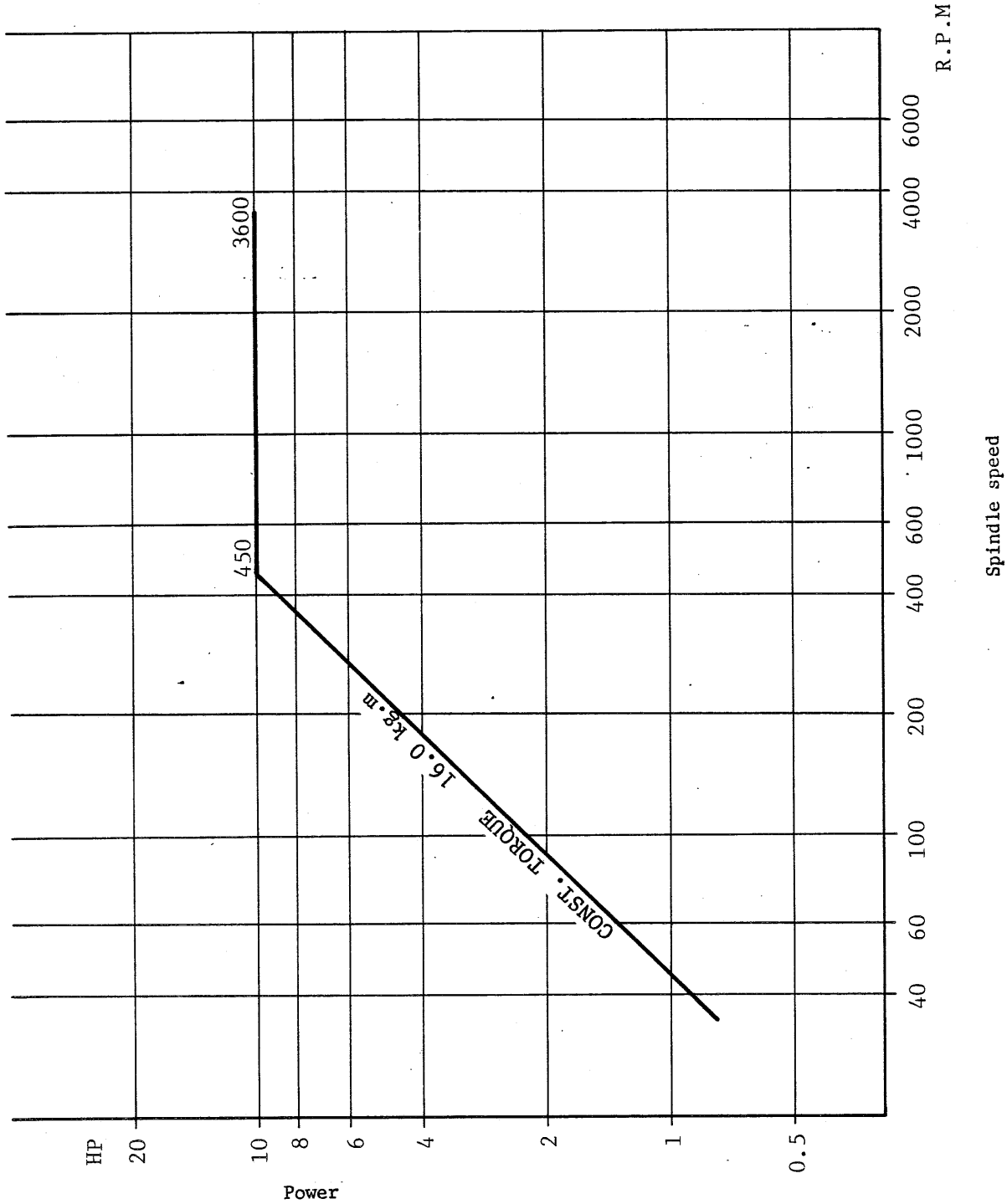

Spindle speed 3600 rpm

Power 10 HP (30 Min. Rating) Power up type

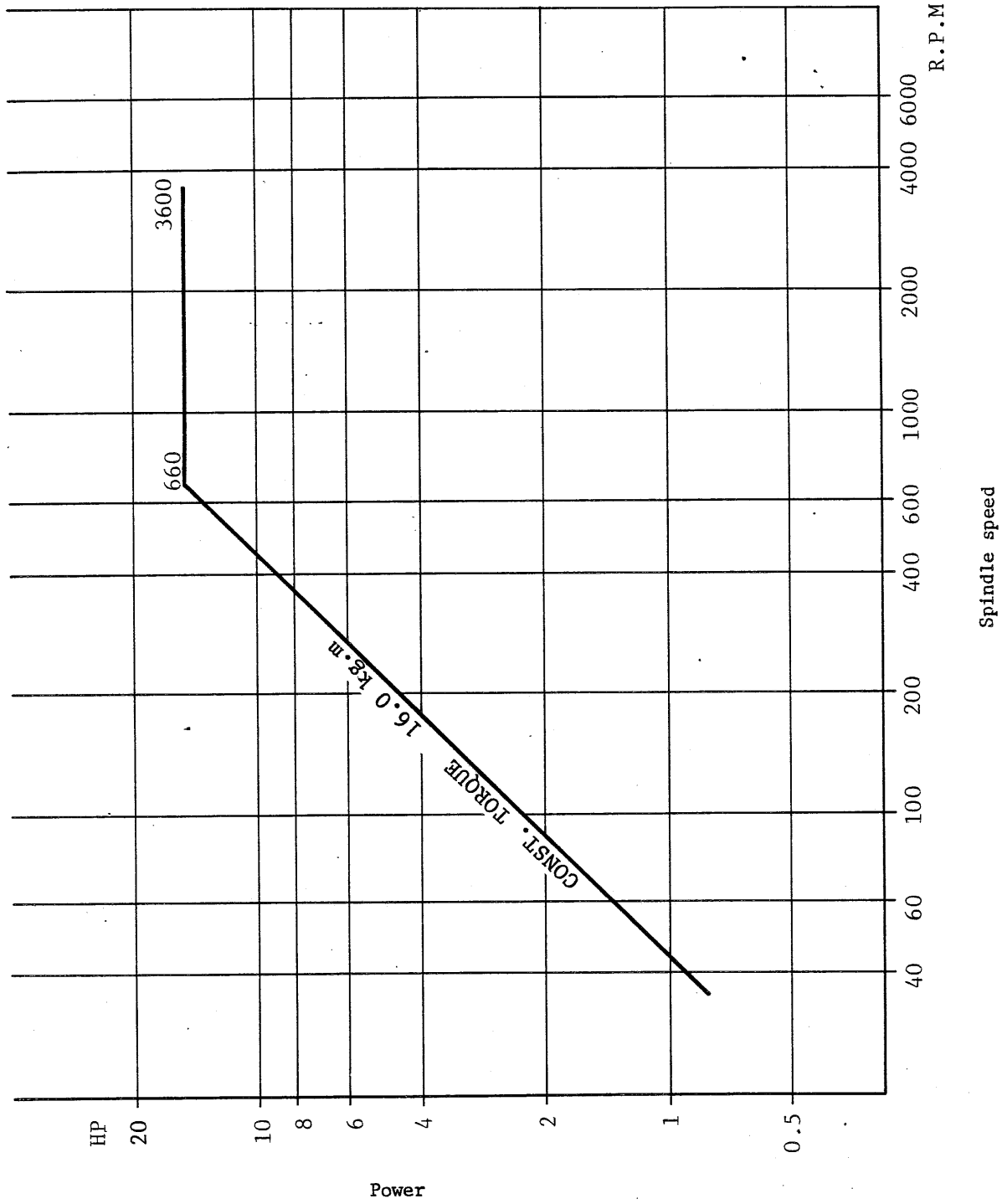

Spindle speed 3600 rpm

Power 20 HP (30 Min. Rating) Semi-wide range output type

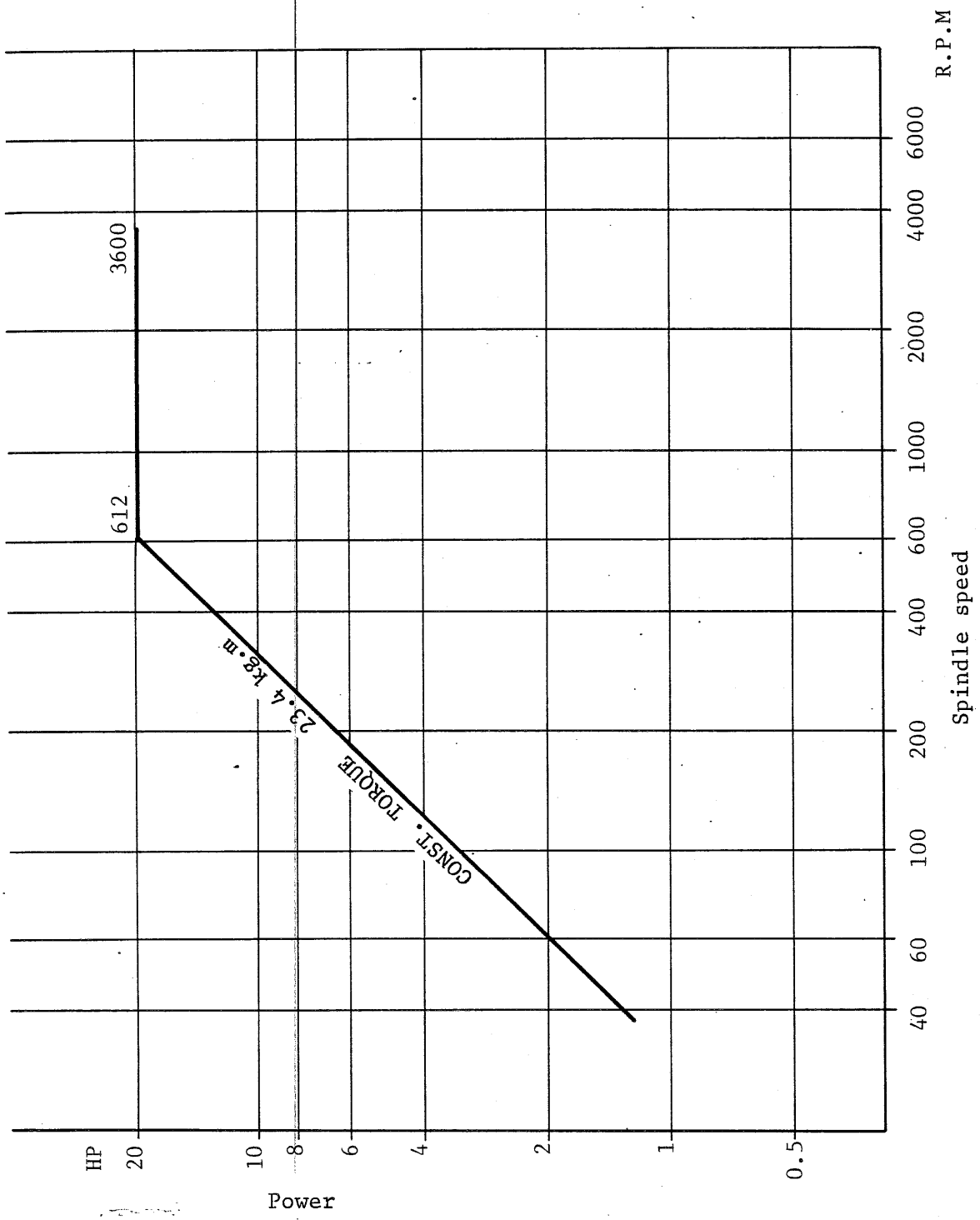

Spindle speed 4600 rpm

Power 10 HP (30 Min. Rating)

(option)

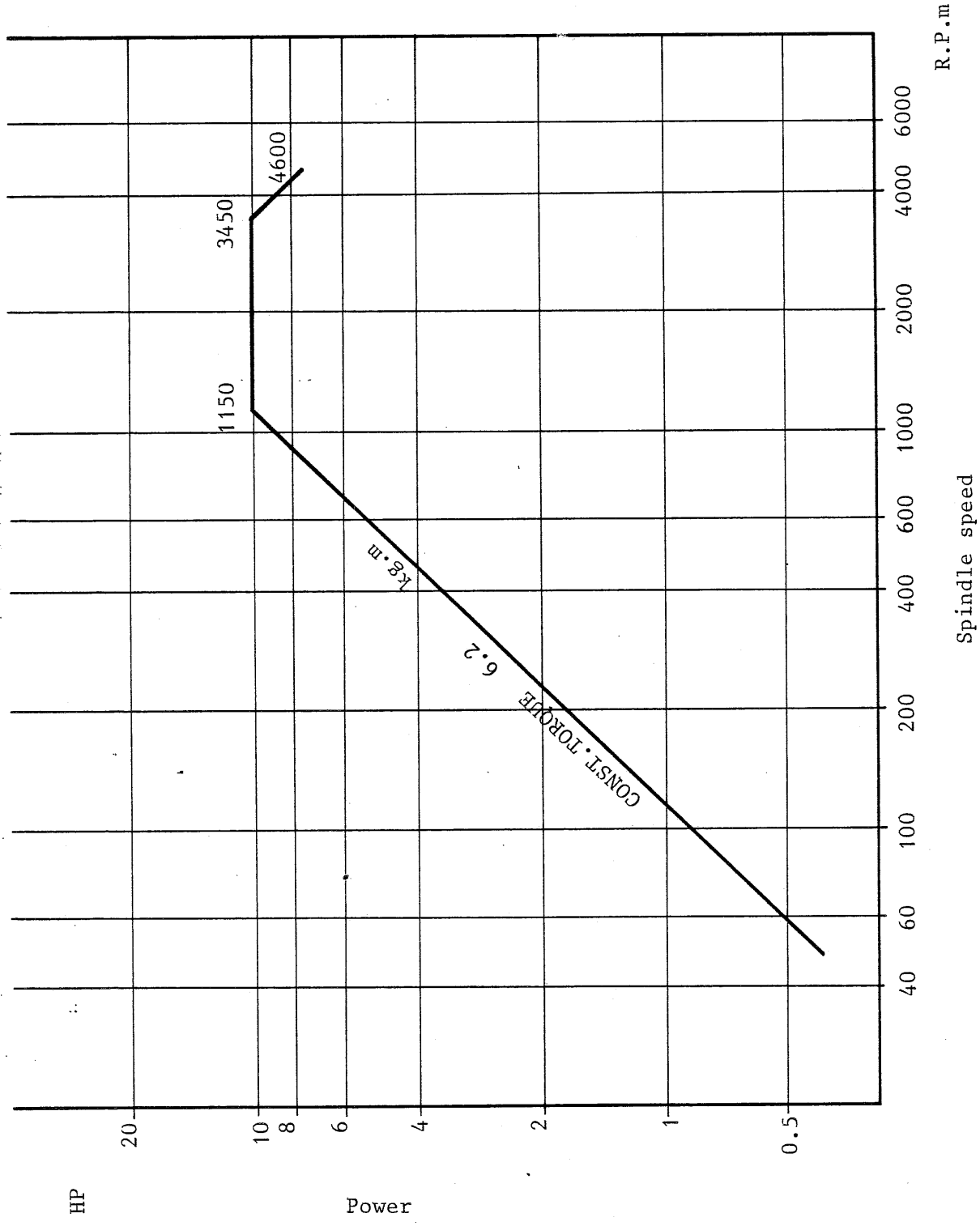

Spindle speed 4600 rpm

Power 15 HP (30 Min. Rating)

(option)

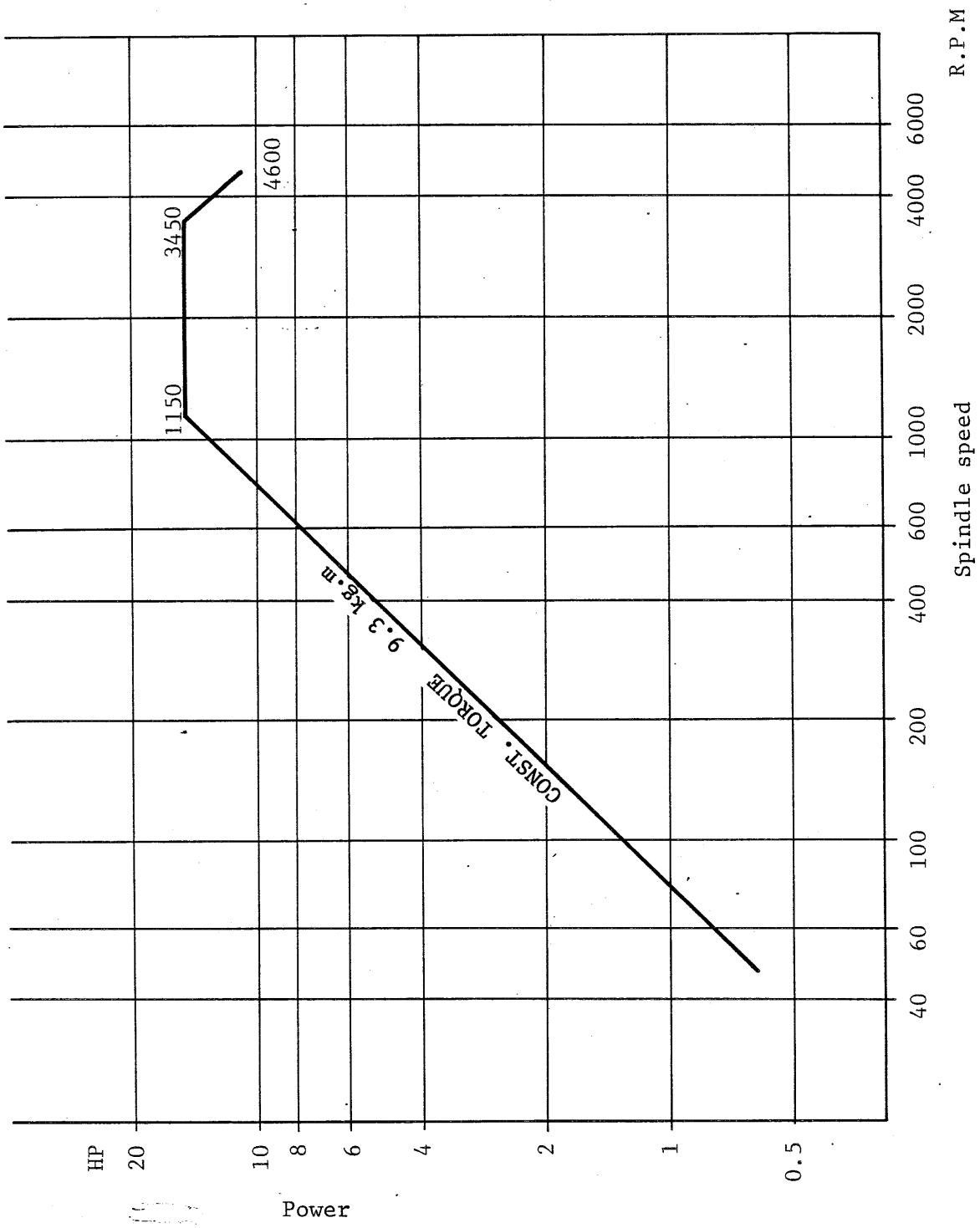

Spindle speed 6000 rpm

Power 10 HP (30 Min. Rating) (option)

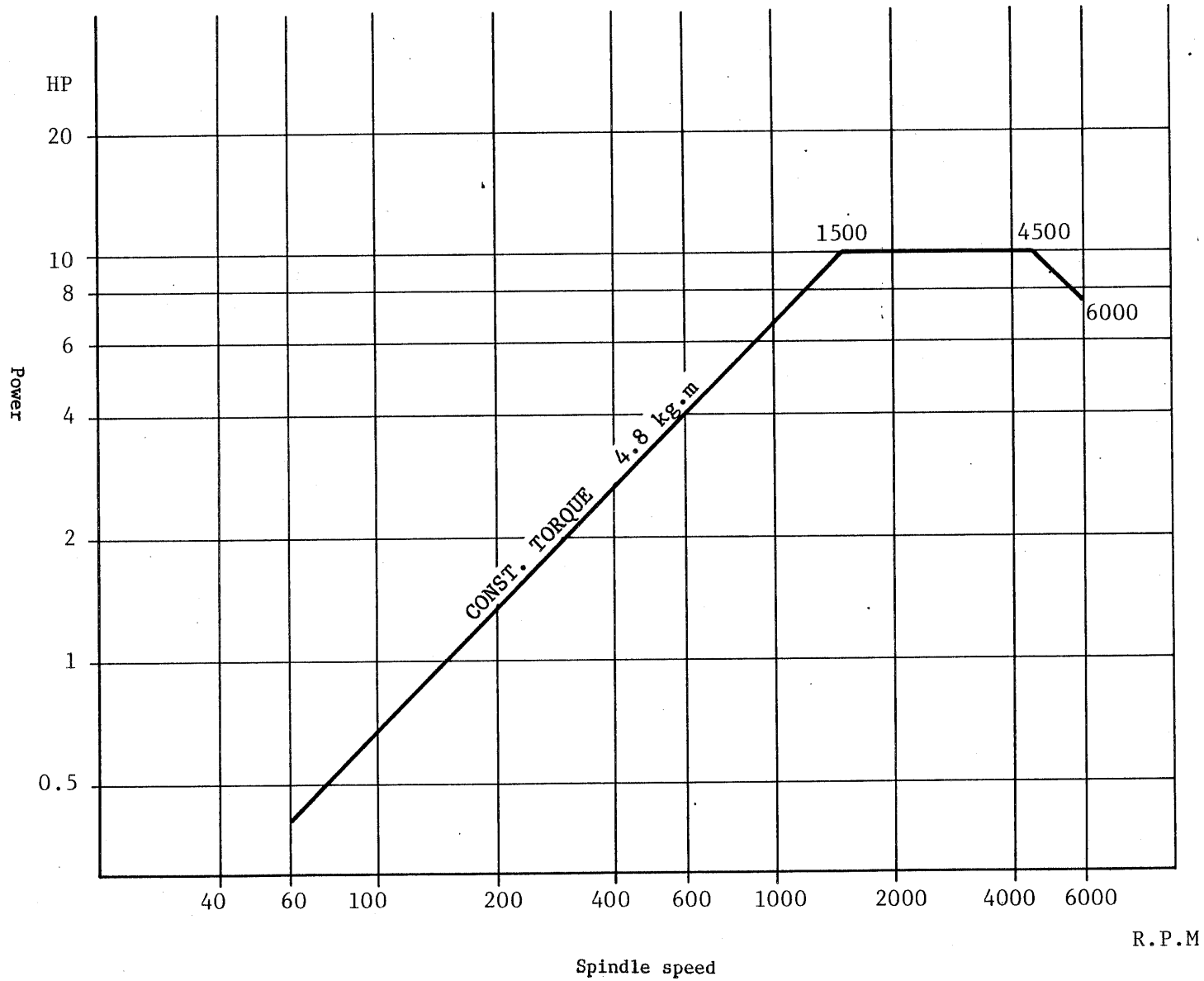




Mazak

Spindle speed 6000 rpm

Power 15 HP (30 Min. Rating)

(option)

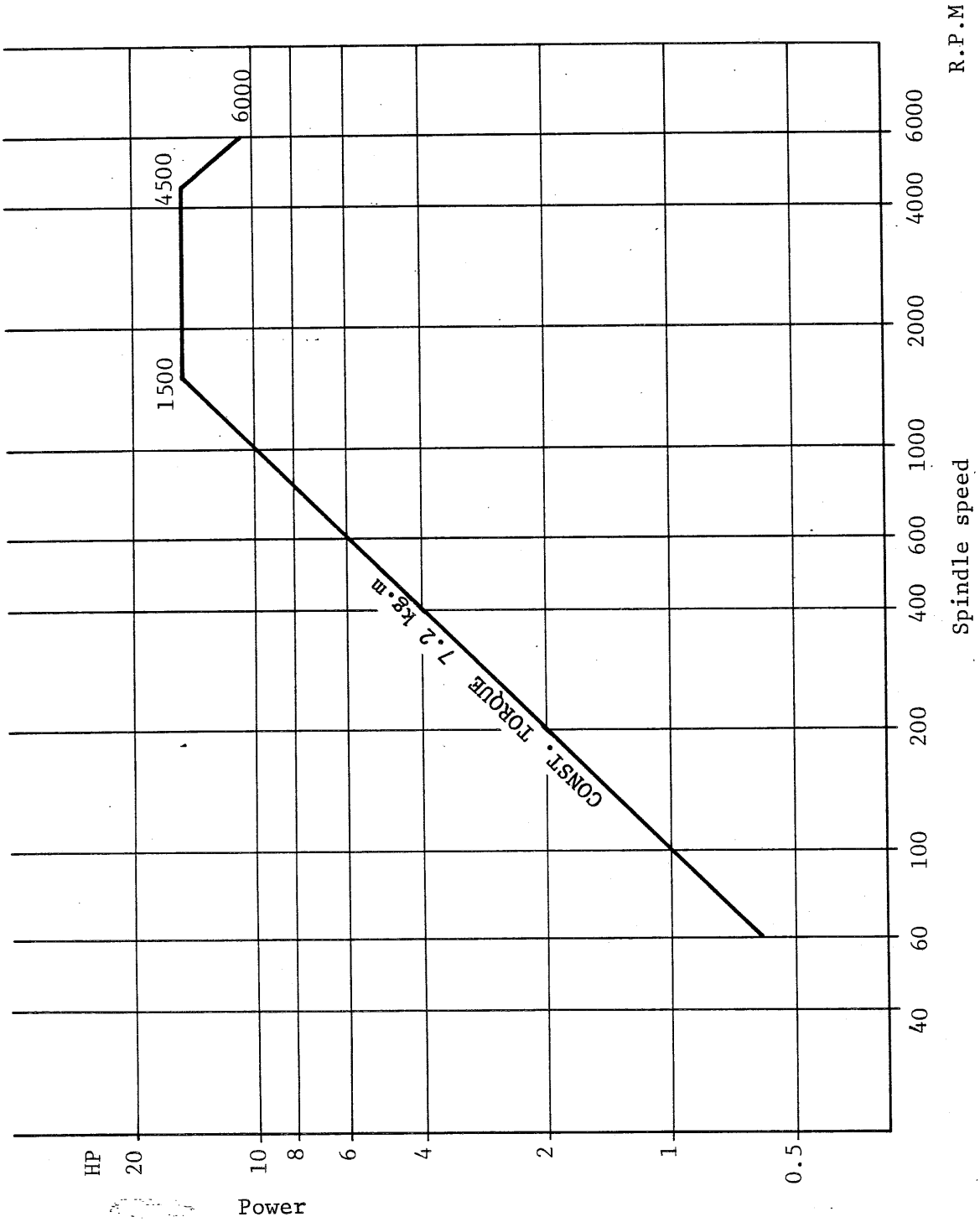

## 9. FRONT CHUCK H012M

Before using the Front Chuck H012M, peruse the instruction manual of Howa Machinery, Ltd. to make yourself familiar with the characteristics of the chuck.

This chuck is designed to get it to have a holding strength by sealing up air in the body, therefore, air leak from it will bring about a serious danger. Be sure not to neglect maintenance and inspection.

Read the instruction manual again when:

1) The workpiece slips,

2) The holding strength is not sufficient

3) Air leaks